ISTA 6 Series General Simulation Performance Test PROJECT*

VERSION DATE September 2010 Initial Release

Last TECHNICAL Change: SEPTEMBER 2010

Last EDITORIAL Change: JANUARY 2016

For complete listing of Procedure Changes and Version Dates go to www.ista.org

**ISTA, Distributing Confidence, Worldwide™**

ISTA® 6-Series *Member Performance Tests* are protocols created by ISTA members to suit their own particular purposes and applications. This 6-SAMSCLUB test was developed by ISTA in cooperation with Sam's Club, and is designed as a General Simulation protocol. General Simulation tests

- Challenge the capability of the package and product to withstand transport hazards, **but**
- Utilize general simulation of actual transport hazards, **and**
- Do not necessarily comply with carrier packaging regulations.

When properly executed, ISTA procedures will provide tangible benefits of:

- Product to market time reduction
- Confidence in product launch
- Reduction in damage and product loss
- Balanced distribution costs
- Customer satisfaction contributing to increased market share

There are three sections to this procedure: Overview, Testing, and Reporting

- **Overview** provides general knowledge required before testing **and**
- **Testing** presents the specific instructions to do laboratory testing **and**
- **Reporting** indicates what data shall be recorded to submit a test report.

Two systems of weights and measures are presented in ISTA test procedures: English system (Inch-Pound) or SI (Metric). Inch-Pound units are shown first followed by the Metric units in parentheses; there may be exceptions in some tables (when shown separately).

Familiarity with the following units and symbols used in this document is required:

| For measuring | English units and symbols | Metric units and symbols |
|---|---|---|
| Weight | pounds (lb) | kilograms (kg) or grams (gm) |
| Force | pounds force (lbf) | newtons (N) |
| Distance | feet (ft) or inches (in) | meters (m) or millimeters (mm) |
| Velocity | inches per second (in/sec) | meters per second (m/sec) or millimeters per second (mm/sec) |
| Volume | cubic inches ($in^3$) | cubic centimeters ($cm^3$) or cubic meters ($m^3$) |
| Density | pounds per cubic inch ($lb/in^3$) | kilograms per cubic meter ($kg/m^3$) |
| Temperature | Fahrenheit (°F) | Celsius (°C) |

- Either system may be used as the unit of measure, **but**
- The units chosen shall be used consistently throughout the procedure.
- Units are typically converted to two significant figures **and**
- Not exact equivalents.

## *VERY IMPORTANT:*

**The entire document shall be read and understood before proceeding with a test.**

*** Notes Regarding ISTA "Projects" and "Procedures"**

- ISTA® 6-SAMSCLUB is currently an ISTA "Project", first released in September 2010. New ISTA test protocols are given the designation "Project" during their implementation phase. After a minimum one-year period and required evaluation, a "Project" will either be adopted as an established "Procedure", revised and kept as a "Project" for another period of time, or be dropped. Therefore, a "Project" is potentially subject to greater and more frequent revision than a "Procedure".
- ISTA members may use either Procedures or Projects for package certification.
- Comments regarding this Project and its use are encouraged and welcome. Please contact ista@ista.org.

# OVERVIEW OF PROJECT 6-SAMSCLUB

Project 6-SAMSCLUB is a general simulation test for packaged-products shipped through the Sam's Club distribution system to final destinations in the U.S. It was developed from an extensive survey, observation, and field measurement program of the actual Sam's Club system. The program involved personal visits to various Distribution Centers, overseas suppliers and ports, and U.S. Club stores. Ocean containers, trucks, and fork lifts were instrumented for acceleration and other data. Industry experts translated this information, observation, and data into the 6-SAMSCLUB Project laboratory tests specified here.

Users should be aware of other packaging requirements (configurations, materials, weight and height limits, etc.) for the Sam's Club system.

Project 6-SAMSCLUB is appropriate for four different types of packaged-products, designated Types **A** through **D** below, commonly shipped through the Sam's distribution system to U.S. destinations. For **Type A** non-perishable products which are initially shipped as palletized loads, there are two sub-types based on the club (store) quantity. For **Floor-Loaded** products there are two types based on size and weight. See **Definitions** below for an explanation of club (store) quantity, large/small floor-loaded products, and other terms used in this document.

**Packaged-Product Types**

- **Type A: Non-Perishable, initially shipped palletized** (on standard or custom pallet)
  - Club (store) quantity is the unchanged palletized load
  - Club (store) quantity is *other* than the unchanged palletized load, including elongated and flat package-products
- **Types B and C: Non-Perishable, initially shipped floor-loaded**, including elongated and flat packaged-products
  - **Type B:** Large floor-loaded packaged-products
  - **Type C:** Small floor-loaded packaged-products
- **Type D: Perishable**, initially shipped palletized

**Definitions**

- **Perishable.** Typically products such as foods, beverages, fresh flowers, etc. which may be susceptible to deterioration or spoilage if not maintained at prescribed temperature, humidity, or other conditions.
- **Non-Perishable.** Typically products which are not harmed by extremes of temperature, humidity, etc.
- **Floor-Loaded.** Products which are initially shipped without being unitized or palletized, initially loaded directly into a transport vehicle or ocean container, where the club (store) quantity is a case or unit.
  - A floor-loaded packaged-product is considered **Large** if it
    - Weighs 50 lb (23 kg) or more **or**
    - The longest dimension is 24 in (610 mm) or greater **and** the next-longest dimension is 20 in (510 mm) or greater **and** the shortest dimension is 20 in (510 mm) or greater **or**
    - Any of the length, width, or height dimensions are 30 in (760 mm) or greater
  - A floor-loaded packaged-product is considered **Small** if it does not meet the definition of **Large** above.
- **Club (Store) Quantity**
  - The club or store quantity is the number of packaged-products typically shipped at any one time to an individual club or store to replenish its stock.
  - A group of packaged-products may be shipped from the manufacturer or producer in a unitized load, but the load may subsequently be disassembled into smaller groups or individual packaged-products for shipment to the clubs or stores to meet their replenishment requirements.
- **Domestic Shipment**, where the initial point of origin is within the U.S.
- **International Shipment**, where the initial point of origin is outside the U.S.
- **Unitized Load.** Multiple articles or packages bound together (with straps, shrink- or stretch-film, etc.) for handling and transportation as one unit.
- **Standard and Custom Pallet.** A standard pallet is a design which is in wide industry use, with published specifications, quality, and applications, used within those specifications and in a typical application. Standard pallets have information, provided by their manufacturers or distributors, available on the internet. A custom pallet is one designed for a specific product or narrow range of products, and with its design and performance characteristics not widely known or published.
- **Elongated Packaged-Product**
  - A packaged-product where the longest dimension is 36 in (910 mm) or greater **and**
  - both of the other dimensions are each 20 percent or less of the longest dimension
- **Flat Packaged-Product**
  - A packaged-product where the shortest dimension is 8 in (200 mm) or less **and**
  - the next longest dimension is four (4) or more times larger than the shortest dimension, **and**
  - the volume is 800 in$^3$ (13,000 cm$^3$) or greater

***NOTE:*** If a packaged-product is both Elongated and Flat in accordance with the above definitions, it should be tested as Elongated.

**Preface continued on next page**

# OVERVIEW OF PROJECT 6-SAMSCLUB



**Continued from previous page**

- **Slip Sheet**
  - A flat sheet of material with tabs on one or more sides, used as abase upon which to assemble, store, handle and transport goods and materials as a unit load.

**General**

- Testing can be used to evaluate the protective performance of a packaged-product related to vibrations, shocks and other stresses normally encountered during handling and transportation in the Sam's Club distribution system.
- Tests and levels are generally based on the survey, observation, and measurement program described above.
- The package and product are considered together and not separately.
- Some conditions of transit, such as moisture, pressure, or unusual handling may not be covered.

Other ISTA Procedures or Projects may be appropriate for different conditions or to meet different objectives.

Refer to *Guidelines for Selecting and Using ISTA Test Procedures and Projects* for additional information.

***NOTE:***
Hazardous Material (Dangerous Goods) packaging that passes this test procedure may not meet international, national or other regulatory requirements for the transport of Hazardous Materials (Dangerous Goods). **This test is not a substitute** for United Nations and/or any other required test standards for the transport of Hazardous Materials (Dangerous Goods), but may be used as an additional test in conjunction with them.

# OVERVIEW OF PROJECT 6-SAMSCLUB

**Scope**

Project 6-SAMSCLUB covers the testing of packaged-products prepared for shipment via the Sam's distribution system to U.S. destinations. In this system, packaged-products are typically shipped from the manufacturer or producer through one or more Distribution Centers (DCs), and then to the clubs (stores). Various types of handling may occur in the DCs, including manual, fork lift, clamp truck, etc. The original shipment configuration may be altered at a DC to fit the needs of the system and the requirements of the clubs (stores). Final shipment to the club (store) is typically on a pallet.

**Product Damage Tolerance and Package Degradation Allowance**

The shipper, manufacturer, Sam's Club buyer, and/or other stakeholders shall determine the following prior to testing, to permit the determination of *pass* or *fail* at the conclusion of the tests:

- what constitutes damage to the product **and**
- what damage tolerance level is allowable, if any, **and**
- the correct methodology to determine product condition at the conclusion of the test **and**
- the acceptable package condition at the conclusion of the test.

For additional information on these determinations refer to *Guidelines for Selecting and Using ISTA Test Procedures and Projects.*

**Additional Information, *IMPORTANT***

**The shipper, manufacturer, Sam's Club buyer and/or other stakeholders shall also provide information regarding the club (store) quantity, pallet type, initial shipment configuration, approved container loading diagram, details of shipment and configurations within the distribution system, typical atmospheric conditions, etc. as required to determine proper testing parameters. Many of the TEST BLOCKS require such information for proper implementation; see the individual TEST BLOCKS for specific details.**

**Samples**

Both products and packages should be as close as possible to actual production items. Pre-production prototypes such as hand-made samples, CAD-generated one-of-a-kind or short run samples, etc. are usually not sufficiently representative of production items to yield meaningful test results. It may be appropriate to conduct preliminary tests of a product and package early in the development cycle, but final official testing should be performed with actual production items.

One sample is required for this test procedure. If the sample is a palletized or unitized load, it may be required to select individual case or unit samples from that load for further testing as directed.

When multiple identical specimens are tested, all specimens must pass all tests.

To permit an adequate determination of representative performance of the packaged-product, ISTA:

- *Requires* the test procedure, with the required number of samples, to be performed one time, **but**
- *Recommends* performing the entire test procedure five or more times using new samples for each test.

Refer to *Guidelines for Selecting and Using ISTA Test Procedures and Projects* for additional information.

***NOTE:***
In order to ensure testing in perfect condition, products and packages shipped to an ISTA Certified Laboratory for testing shall be:

- Adequately over-packaged for shipment **or**
- Repackaged in new packaging at the laboratory.

***NOTE:***
Any pallet or skid used in this procedure should be of a type and condition which is typical of what is in actual field use for the packaged-product being tested.

***NOTE:***
It is important to thoroughly document the configuration, materials, and construction of the tested product and package. Significant variations in performance can sometimes be caused by seemingly insignificant differences. Photo documentation is strongly recommended to supplement detailed written descriptions.

**Basis Weight**

**Basis Weights of Corrugated Board**

When the outer package is a corrugated box, it is strongly recommended that the basis weights of the papers/paperboards used to make the box be determined and documented. Basis weights are likely to be better indicators of box construction and equivalence for comparison purposes than ECT or Burst performance ratings.

Refer to *Guidelines for Selecting and Using ISTA Procedures and Projects* for additional information on documentation and basis weight determination.

# OVERVIEW OF PROJECT 6-SAMSCLUB

**The tests shall be performed on each test sample in the sequence indicated in the following tables:**

## Type A – Non-Perishable, Initially Shipped on Standard or Custom Pallet

***Note:*** Also use this test for **Type B** or **C** items which are *unitized* and initially shipped floor-loaded on a slipsheet, but which are ultimately placed on a pallet for shipment *as a unit* to the club (store). Properly secure the unit to a standard pallet (with several layers of stretch wrap, with strapping, or with other appropriate means). Subsequently, consider it to be a **Type A** and test it according to the chart below.

| Sequence Number | Test Category | Test Type | Test Level | Remarks |
|---|---|---|---|---|
| 1 | Atmospheric Preconditioning<br>TEST BLOCK 1 | Temperature and Humidity | Lab ambient, 12 hours | Required |
| 2 | Atmospheric Conditioning<br>TEST BLOCK 1 | Controlled Temperature and Humidity | Temperature and humidity chosen from chart | Optional |
| 3 | Shock<br>TEST BLOCK 2 | Inclined or Horizontal Impact | 42 in/sec (3.5 ft/sec)<br>(1.1 m/sec) impact velocity or velocity change | Required<br>Impact all 4 vertical faces of pallet load |
| 4 | Shock<br>TEST BLOCK 3 | Rotational FLAT Drop | 6 in (150 mm) (domestic)<br>8 in (200 mm) (int'l) | Required<br>Test entire pallet load |
| 5 | Compression, Vertical<br>TEST BLOCK 4 | Top-to-Bottom<br>Pallet on top | Calculated from formula<br>Maintain force for 1 hour | Required<br>Test entire pallet load<br>Machine, or weights and load spreader |
| 6 | Vibration, Vertical<br>TEST BLOCK 8 | Random | Overall Grms level of 0.46<br>3 hours | Required<br>Test entire pallet load |
| 7 | Shock<br>TEST BLOCK 9 | Rotational EDGE Drop | 4 in (100 mm) (domestic)<br>6 in (150 mm) (int'l) | Required<br>Test entire pallet load |
| 8 | Flat Push<br>TEST BLOCK 11 | Push Pallet Load with Fork Blade Tip | Push 40 in (1 m) in 2-3 sec | Required only for loads on custom pallets |
| **Stop here if "Club Quantity" is the unchanged pallet load.**<br>**Continue if the "Club Quantity" is *not* the unchanged pallet load** | | | | |
| Select three specimens from the load, one each from top, middle, and bottom layers (if possible) for further tests below. All specimens must pass all tests. | | | | |
| 9 | Compression, Horizontal<br>TEST BLOCK 10 | Clamping Simulation | Calculated from formula<br>Clamp in multiple orientations as directed | Required only for certain distribution situations |
| 10 | Shock<br>TEST BLOCK 5 | Free-Fall Drop Bottom Orientations | 15 in (380 mm) (domestic)<br>18 in (460 mm) (int'l) | Required<br>3 drops each specimen |
| 11 | Vibration, Vertical, Stacked<br>TEST BLOCK 12 | Random<br>All 3 Specimens Stacked Vertically | Overall Grms level of 0.55<br>1 hour | Required only for certain product types and distribution situations |
| 12 | Shock<br>TEST BLOCK 13 | Concentrated Edge Impact | Hazard box dropped<br>12 in (300 mm) (domestic)<br>15 in (380 mm) (int'l) | Required only for flat packages |
| 13 | Shock<br>TEST BLOCK 14 | Bridged Impact | Hazard box dropped<br>12 in (300 mm) (domestic)<br>15 in (380 mm) (int'l) | Required only for elongated packages |

# OVERVIEW OF PROJECT 6-SAMSCLUB

## Type B – Non-Perishable, Initially Shipped Floor-Loaded into a Transport Vehicle or Ocean Container, Club Quantity is Case or Unit, Packaged-Product Defined as Large

***Notes:***

- Use this test for packaged-products defined as **Large** according to the *Definitions* section on page 2.
- If the test item is *unitized* and initially shipped floor-loaded on a slipsheet, but is ultimately placed on a pallet for shipment *as a unit* to the club (store), place it on a standard pallet prior to starting the test and use the ***Type A*** test protocol on page 5 (*Non-Perishable, Initially Shipped on Standard or Custom Pallet*). Properly secure to the pallet with several layers of stretch wrap, with strapping, or with other appropriate means.
- If the test item is *unitized* and initially shipped floor-loaded *without* a slipsheet, but is ultimately placed on a pallet for shipment *as a unit* to the club (store), perform Sequence Numbers 1, 2, and 7 below, then secure the unit to a standard pallet and perform Sequence Numbers 3 through 7 of the ***Type A*** test protocol on page 5 (*Non-Perishable, Initially Shipped on Standard or Custom Pallet*). Properly secure to the pallet with several layers of stretch wrap, with strapping, or with other appropriate means.

| Sequence Number | Test Category | Test Type | Test Level | Remarks |
|---|---|---|---|---|
| 1 | Atmospheric Preconditioning<br>TEST BLOCK 1 | Temperature and Humidity | Lab ambient, 12 hours | Required |
| 2 | Atmospheric Conditioning<br>TEST BLOCK 1 | Controlled Temperature and Humidity | Temperature and humidity chosen from chart | Optional |
| 3 | Shock<br>TEST BLOCK 2 | Inclined or Horizontal Impact<br>Impact 4 or 6 faces as directed | 42 in/sec (3.5 ft/sec)<br>(1.1 m/sec) impact velocity or velocity change | Required |
| 4 | Shock<br>TEST BLOCK 3 | Rotational FLAT Drop<br>Test in multiple orientations as directed | 7 in (180 mm) (domestic)<br>9 in (230 mm) (int'l) | Required |
| 5 | Compression, Vertical<br>TEST BLOCK 4 | Test in multiple orientations as directed<br>Standard pallet on top depending upon upper surface area | Calculated from formula<br>Maintain force for 1 hour | Required<br>Machine, or weights and load spreader<br>Pallet required for upper surface areas ≥ 45 *x* 37 in (1140 *x* 940 mm) |
| 6 | Vibration, Vertical<br>TEST BLOCK 8 | Random<br>With Top Load of 0.0035 lbs/in$^3$ (96 kg/m$^3$) | Overall Grms level of 0.46<br>3 hours | Required<br>Test in multiple orientations as directed |
| 7 | Compression, Horizontal<br>TEST BLOCK 10 | Clamping Simulation | Calculated from formula<br>Clamp in multiple orientations as directed | Required only for certain distribution situations |
| 8 | Shock<br>TEST BLOCK 9 | Rotational EDGE Drop<br>Test in multiple orientations as directed | 5 in (130 mm) (domestic)<br>7 in (180 mm) (int'l) | Required |
| 9 | Shock<br>TEST BLOCK 13 | Concentrated Edge Impact | Hazard box dropped<br>12 in (300 mm) (domestic)<br>15 in (380 mm) (int'l) | Required only for flat packages |
| 10 | Shock<br>TEST BLOCK 14 | Bridged Impact | Hazard box dropped<br>12 in (300 mm) (domestic)<br>15 in (380 mm) (int'l) | Required only for elongated packages |

# OVERVIEW OF PROJECT 6-SAMSCLUB

## Type C – Non-Perishable, Initially Shipped Floor-Loaded into a Transport Vehicle or Ocean Container, Club Quantity is Case or Unit, Packaged-Product Defined as Small

***Notes:***

- Use this test for packaged-products defined as **Small** according to the *Definitions* section on page 2.
- If the test item is *unitized* and initially shipped floor-loaded on a slipsheet, but is ultimately placed on a pallet for shipment *as a unit* to the club (store), place it on a standard pallet prior to starting the test and use the ***Type A*** test protocol on page 5 (*Non-Perishable, Initially Shipped on Standard or Custom Pallet*). Properly secure to the pallet with several layers of stretch wrap, with strapping, or with other appropriate means.
- If the test item is *unitized* and initially shipped floor-loaded *without* a slipsheet, but is ultimately placed on a pallet for shipment *as a unit* to the club (store), perform Sequence Numbers 1, 2, and 6 below, then secure the unit to a standard pallet and perform Sequence Numbers 3 through 7 of the ***Type A*** test protocol on page 5 (*Non-Perishable, Initially Shipped on Standard or Custom Pallet*). Properly secure to the pallet with several layers of stretch wrap, with strapping, or with other appropriate means.

| Sequence Number | Test Category | Test Type | Test Level | Remarks |
|---|---|---|---|---|
| 1 | Atmospheric Preconditioning<br>TEST BLOCK 1 | Temperature and Humidity | Lab ambient, 12 hours | Required |
| 2 | Atmospheric Conditioning<br>TEST BLOCK 1 | Controlled Temperature and Humidity | Temperature and humidity chosen from table | Optional |
| 3 | Shock<br>TEST BLOCK 6 | Free-Fall Drop<br>Multiple Orientations<br>First Sequence | 6 drops – 14 in (360 mm) max (domestic)<br>18 in (460 mm) max. (int'l) | Required |
| 4 | Compression, Vertical<br>TEST BLOCK 4 | Test in multiple orientations as directed | Calculated from formula<br>Maintain force for 1 hour | Required<br>Machine, or weights and load spreader |
| 5 | Vibration, Vertical<br>TEST BLOCK 8 | Random<br>With Top Load of 0.0035 lbs/in$^3$ (96 kg/m$^3$) | Overall Grms level of 0.46<br>3 hours | Required<br>Test in multiple orientations as directed |
| 6 | Compression, Horizontal<br>TEST BLOCK 10 | Clamping Simulation | Calculated from formula<br>Clamp in multiple orientations as directed | Required only for certain distribution situations |
| 7 | Shock<br>TEST BLOCK 7 | Free-Fall Drop<br>Multiple Orientations<br>Second Sequence | 6 drops – 26 in (660 mm) max (domestic)<br>32 in (810 mm) max. (int'l) | Required |
| 8 | Shock<br>TEST BLOCK 13 | Concentrated Edge Impact | Hazard box dropped<br>12 in (300 mm) (domestic)<br>15 in (380 mm) (int'l) | Required only for flat packages |
| 9 | Shock<br>TEST BLOCK 14 | Bridged Impact | Hazard box dropped<br>12 in (300 mm) (domestic)<br>15 in (380 mm) (int'l) | Required only for elongated packages |

# OVERVIEW OF PROJECT 6-SAMSCLUB

## Type D – Perishable, Initially Shipped Palletized

| Sequence Number | Test Category | Test Type | Test Level | Remarks |
|---|---|---|---|---|
| 1 | Atmospheric Conditioning<br>TEST BLOCK 1 | Controlled Temperature and Humidity | Cool, cold, or frozen as appropriate, chosen from chart | Required |
| 2 | Shock<br>TEST BLOCK 9 | Rotational EDGE Drop | 4 in (100 mm) (domestic)<br>6 in (150 mm) (int'l) | Required<br>Test entire pallet load |
| 3 | Compression, Vertical<br>TEST BLOCK 4 | Top-to-Bottom<br>Standard pallet on top | Calculated from formula<br>Hold force for 30 seconds, release | Required<br>Test entire pallet load<br>Machine, or weights and load spreader |
| Select three specimens from the INTERIOR of the load (if possible), one each from top, middle, and bottom layers (if possible) for further tests below. All specimens must pass all tests. | | | | |
| 4 | Shock<br>TEST BLOCK 5 | Free-Fall Drop Bottom Orientations | 15 in (380 mm) (domestic)<br>18 in (460 mm) (int'l) | Required<br>3 drops each specimen |

***NOTE:***
The above is a deliberately abbreviated test sequence, intended to be completed in a minimum amount of time. This will help to ensure that the characteristics of the cool, cold, or frozen test specimen do not change appreciably during the sequence, if the tests cannot be conducted in the conditioned atmosphere.

***NOTE:***
Vibration testing is not required for Type D, Perishable packaged-products.

# EQUIPMENT REQUIRED FOR PROJECT 6-SAMSCLUB

**Equipment Required Atmospheric Conditioning**

Atmospheric Pre-Conditioning and Conditioning:

- Humidity recorder complying with of the apparatus section of ASTM D 4332 **or** ISO 2233.
- Temperature recorder complying with the apparatus section of ASTM D 4332 **or** ISO 2233.

**Controlled Temperature and Humidity:**

- Chamber and Control apparatus complying with the apparatus section of ASTM D 4332 **or** ISO 2233.

**Equipment Required Shock**

| Type of Shock Test | Type of Equipment | Equipment Requirements | Additional Required Equipment |
|---|---|---|---|
| Free-Fall Drop Tests | Free-fall drop tester 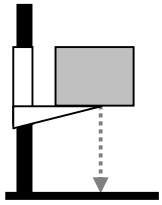 | Compliance with the apparatus sections of ASTM D 5276 **or** ISO 2248. | |
| Rotational FLAT Drop Tests | 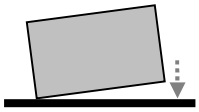 | Compliance with the apparatus sections of ASTM D 6179 **or** ISO 2876. | |
| Rotational EDGE Drop Tests | Support Block 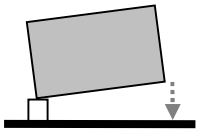 | Compliance with the apparatus sections of ASTM D 6179 **or** ISO 2876. | **Support block**<br>3.5 to 4.0 in (90 to 100 mm) in height and width and at least 8 in (200 mm) longer than the longest package dimension to be supported. |
| Inclined or Horizontal Impact Tests<br>(Alternates) | Inclined 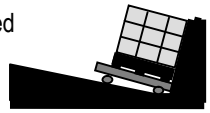 <br>Horizontal 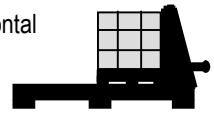 | Compliance with the apparatus sections of ASTM D 880 **or** ASTM D 4003 **or** ISO 2244. | |
| Concentrated Edge Impact Tests | Free-fall drop tester with edge hazard box 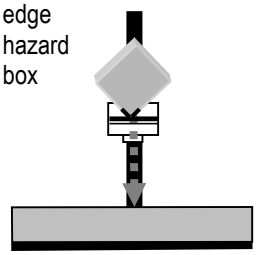 | Drop tester in compliance with the apparatus sections of ASTM D 5276 **or** ISO 2248. | **Concentrated Edge Hazard Box**<br>12 x 12 x 12 in (305 x 305 x 305 mm) wood box with a total weight of 9 lb (4.1 kg). Any required ballast weight should be dense flowable material in a bag or bags, held in place with suitable void fill.<br>The impact edge of the box shall be covered with angle iron. |
| Bridged Impact Tests | Free-fall drop tester with edge hazard box 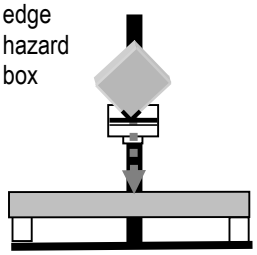 | Compliance with the apparatus section of ASTM D 5265, with the exception of the Hazard Box (Impactor). | **Concentrated Edge Hazard Box and Support Blocks**<br>See above for description of the Concentrated Edge Hazard Box.<br>Support blocks (2 ea) shall be 3.5 to 4.0 in (90 to 100 mm) in height and width and at least 8 in (200 mm) longer than the longest package dimension to be supported. |

# EQUIPMENT REQUIRED FOR PROJECT 6-SAMSCLUB

## Equipment Required Compression

| Type of Compression Test | Type of Equipment | Equipment Requirements | Additional Required Equipment |
|---|---|---|---|
| Vertical Compression (Top-to-Bottom) | Compression Test Machine 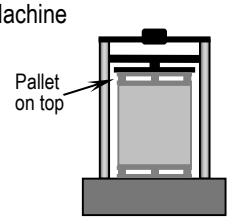  | Compliance with the apparatus section of ASTM D 642 "Fixed-Platen Testing Machine". | Standard 48x40 in (1200x1000 mm) block pallet, "picture-frame", full-perimeter-base type, on top of test item. If test item is shipped on a custom pallet, use an identical custom pallet on top.<br>Top pallet not required for Small floor-loaded items and certain Large floor-loaded items. |
| Vertical Compression (Top-to-Bottom) (Alternate) | Weight(s) & Load Spreader 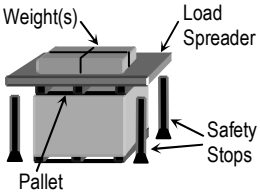  | The Load spreader must be larger than the top face of the test item, and shall be sufficiently rigid to apply a uniform compression force. | See above for description of the pallet.<br>Top pallet not required for Small floor-loaded items and some Large floor-loaded items.<br>Safety stops are recommended to support the load spreader and weight(s) to prevent damage or injury in the event of a rapid collapse of the test item. |
| Horizontal Compression (Clamping Simulation) | Clamp Tester 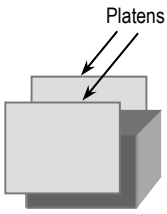  | Platens must be larger than the side dimensions of the test item, and with an opening sufficient to accommodate the test item.<br>The desired compression must be achieved with minimum overshoot. | Controls must permit applying the required clamping force smoothly at a rate of 0.02-0.1 in/sec (0.5-2.5 mm/sec) and with minimum force overshoot.<br>Force measurement accuracy to within ± 5% of the actual value, using accepted calibration means. |

## Equipment Required Vibration

| Type of Vibration Test | Type of Equipment | Equipment Requirements | Additional Required Equipment |
|---|---|---|---|
| Vertical Vibration | Random Vibration Test System 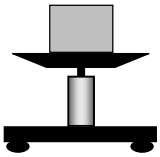 | Compliance with the apparatus section of ASTM D 4728 **or** ISO 13355 | Means must be provided to maintain proper alignment of the test item and any top load apparatus, and to prevent the test item from moving off the vibration system's platform, without restricting vertical motion of the test item or apparatus. |

## Equipment Required Flat Push

| Type of Test | Type of Equipment | Equipment Requirements | Additional Required Equipment |
|---|---|---|---|
| Flat Push with Fork Lift Truck | Fork Lift Truck 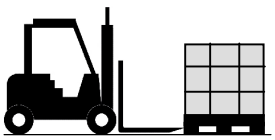 | A fork lift truck of sufficient capacity to handle the test specimens and complying with the apparatus sections of ASTM D 6055 **or** ISO 10531. | |

# EQUIPMENT REQUIRED FOR PROJECT 6-SAMSCLUB

A **Top Load Apparatus** is required for the vibration testing of **Types B** and **C**, **Non-Perishable Items Initially Shipped Floor-Loaded** into a transport vehicle or ocean container.

- The **Top Load Apparatus** is described and shown below, and includes:
  - A sturdy fiberboard box or similar container with a height of 9 in (230 mm), and with a minimum 0.75 in (20 mm) thick plywood load spreader covering the entire inside bottom surface.
  - Some means of adding additional weight as required so that the top load is distributed evenly over the entire inside bottom face area of the top load apparatus.
  - Adequate void fill to securely hold the weight in place to prevent it from moving or bouncing within the top load apparatus.
  - Bottom face dimensions (length and width) which are at least 2 in (50 mm) larger than the top face dimensions of the test item to which it is applied [for a minimum overhang of 1 in (25 mm) on each side], but must not be greater than 6 in (150 mm) larger than the top face dimensions of the test item [for a maximum of 3 in (76 mm) overhang on each side].
- The **Top Load Apparatus** must be divided into 2 separate equal portions if *one* of the top face dimensions of the test item exceeds 18 in (460 mm), and into 4 separate equal portions if *both* of the top face dimensions of the test item exceed 18 in (460 mm).

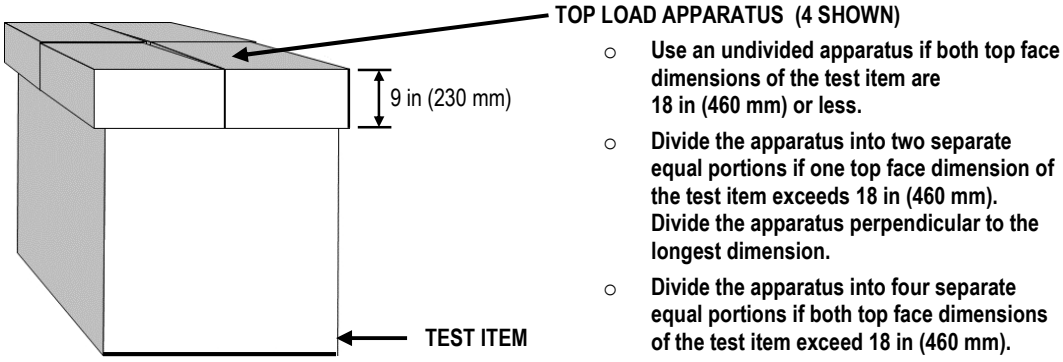


The Top Load is to simulate the effects of 6 lb/ft$^3$ (0.0035 lb/in$^3$) (96 kg/m$^3$) of assorted freight on top of a floor loaded packaged-product in a truck-trailer or ocean container with an inside height of 108 in (2.7 m). This load density has been determined by empirical testing which resulted in correlation between damage in the test lab and damage in the field.

- Means must be provided to maintain proper alignment of the Top Load Apparatus on the test item (column stack fixtures, stretch wrap around the test specimen and the top load apparatus, etc.), without restricting the vertical motion of the top load apparatus and the test specimen.

# BEFORE YOU BEGIN PROJECT 6-SAMSCLUB

Prior to beginning the tests, identify the faces, edges and corners (or other members) of the test specimen according to the procedure below.

| Step | Action | |
|---|---|---|
| 1 | **Place the packaged-product in its intended shipping orientation, or in its most stable orientation.**<br>• If the packaged-product is a palletized or unitized load, place it in its normal handling and shipping orientation.<br>• If the packaged-product has markings or labels which specify a particular shipping orientation, or a configuration which specifies a particular shipping orientation, or has a single particular shipping orientation indicated by an approved container loading diagram, place it in that orientation.<br>• Otherwise, place the packaged-product in its *most stable* orientation. *Most stable* is generally with one of the largest faces down, unless a center of gravity offset or an unusual package configuration causes some other orientation to be most stable.<br>• For Flat and Elongated packaged-products, place the item with one of the largest faces down.<br>• Document the packaged-product orientation and the identification of Faces, Edges, and Corners (Test Specimen Members) on the Test Report. | |
| | **IF the test specimen is …** | **THEN…** |
| | **A unitized load on a standard or custom pallet, or an individual unit or case** with only six faces (2 sides, 2 ends, top and bottom) | Turn the packaged-product so that one of the smallest faces is directly in front of you.<br>Go to Step 2. |
| | **Any type of packaged-product** with less than or more than six faces | Develop a method to identify each face, edge and corner or other members and document with a diagram. |
| | **A cylinder or pail** | Go to Step 3. |
| 2 | • Identify faces according to the diagrams.<br>• Identify edges using the numbers of the two faces forming that edge. Example: Edge 1-2 is the edge formed by face 1 and face 2 of the packaged-product.<br>• Identify corners using the numbers of the three faces that meet to form that corner.<br>Example: Corner 2-3-5 is the corner formed by face 2, face 3, and face 5 of the packaged-product.<br>• Identify orientation of the product inside the package. | |
| | **Unitized Load on Standard or Custom Pallet**<br> 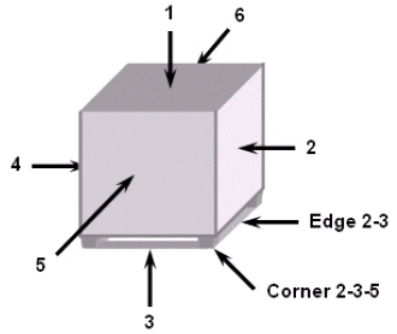 | **Individual Unit or Case**<br> 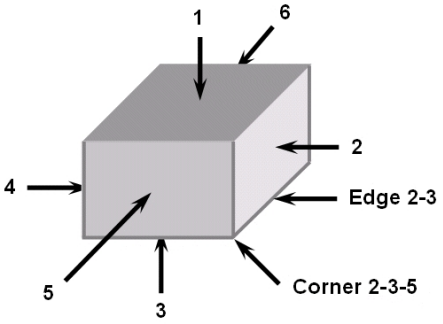 |
| | **Flat**<br> 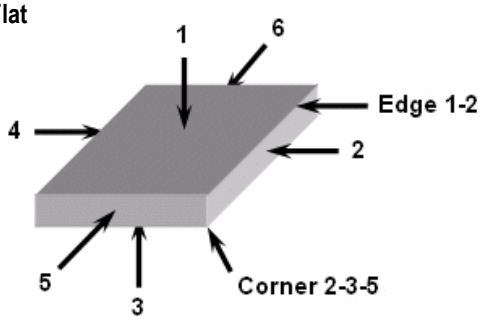 | **Elongated**<br> 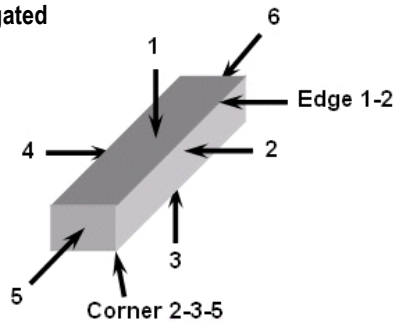 |

**Continued on next page**

# BEFORE YOU BEGIN PROJECT 6-SAMSCLUB

Continued from previous page

**Identification of Faces, Edges and Corners (Test Specimen Members) (continued)**

| Step | Action |
|---|---|
| 3 | **Pail or Cylinder**<br><br>Identify top and bottom as surfaces 1 and 3, according to the diagram.<br><br>Designate four sidewall line locations, equally spaced around the perimeter of the container as shown. Identify sidewall surfaces between the lines as shown. The lines shall be designated as intersections between the sidewall surfaces. Example: line 2-6 is the intersection between sidewall surfaces 2 and 6.<br><br>If the cylinder has one or more side seam joints, one of these seams shall be coincident with line 2-6.<br><br>Identify points on the chimes using the top or bottom number and the numbers of the sidewall line that intersect to form that point. Example: point 1-2-6 is the intersection with top 1 and sidewall line 2-6.<br><br> 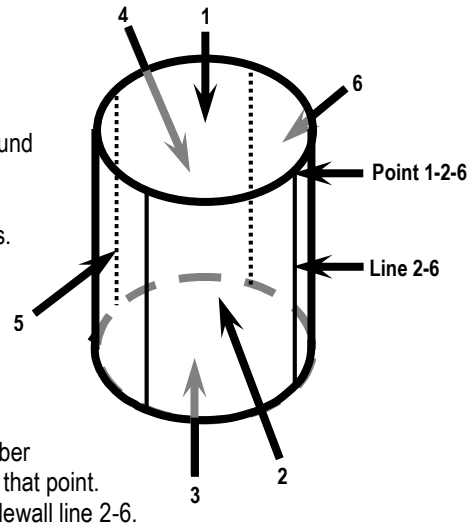 <br><br><br>To orient a pail or cylinder as required in the TEST BLOCKS, relate its identification to that of a box as follows:<br><br>**Box Member Identification** / **Equivalent Pail or Cylinder Identification**<br>Face 1 / Top<br>Face 3 / Bottom<br>Faces 2, 4, 5, 6 / Middle of sidewall surfaces 2, 4, 5, 6<br>Edges – intersections of 2 faces / Edges – sidewall lines or top/bottom chimes<br>Corners – intersections of 3 faces / Corners – intersections of sidewall lines with top and bottom |

**Packaged-Product Weight and Size Measurement**

The weight and size of the packaged-product shall be determined:

- Gross weight in pounds (lb) for English units and kilograms (kg) for Metric
- Exterior dimensions of Length, Width and Height (L x W x H) in inches (in) for English units and millimeters (mm) or meters (m) for Metric.

# BEFORE YOU BEGIN PROJECT 6-SAMSCLUB

**Required Preconditioning:**
The packaged-product shall be preconditioned to laboratory ambient temperature and humidity for not less than twelve (12) hours prior to testing where specified.

**Optional Conditioning** for **Types A**, **B**, and **C, Non-Perishables** (to be performed after the required preconditioning):
To permit an adequate determination of packaged-product performance at anticipated atmospheric limits and where it is known that the atmospheric extremes are detrimental to the product or package, ISTA:

- **Requires** the highest temperature and humidity limits of the product be used, **but**
- **Recommends** that both the highest and lowest atmospheric conditions be used.

**Required Conditioning** for **Type D, Perishables**:
**Type D**, **Perishables** *must* be conditioned to the appropriate **cool**, **cold**, or **frozen** temperatures prior to the start of testing.

The best approach is to perform all tests directly in the conditioned atmosphere. If this is not possible, then tests should be performed quickly after removal of test items from the conditioned atmosphere, and items should be returned periodically to conditioning as necessary to maintain the required control.

**If more than one conditioning sequence is selected, a new and complete test should be performed following each condition.**

| Conditions | Time in Hours | Temperature in °C ±2°C (°F ±4°F) | Humidity in % (± 5%) |
|---|---|---|---|
| Extreme Cold, Uncontrolled RH | 72 | -29°C (-20°F) | Uncontrolled RH |
| Cold, Humid | 72 | 5°C (40°F) | 85% RH |
| Controlled Conditions | 72 | 23°C (73°F) | 50% RH |
| Hot, Humid | 72 | 38°C (100°F) | 85% RH |
| Hot, Humid<br>then<br>Extreme Heat, Moderate RH | 72<br>then<br>6 | 38°C (100°F)<br>then<br>60°C (140°F) | 85% RH<br>then<br>30% RH |
| Elevated Temperature, Uncontrolled RH | 72 | 50°C (120°F) | Uncontrolled RH |
| Extreme Heat, Dry | 72 | 60ºC (140ºF) | 15% RH |
| Severe Cold, Uncontrolled RH | 72 | -18ºC (0ºF) | Uncontrolled RH |
| Cool | 72 | 13ºC (55ºF) | Uncontrolled RH |
| Cold | 72 | 1ºC (34ºF) | Uncontrolled RH |
| Frozen | 72 | -23ºC (-10ºF) | Uncontrolled RH |
| Extreme Heat,<br>Humid,<br>Cyclic | 8<br>16<br>4<br>4<br>16<br>4<br>20 | 60ºC (140ºF)<br>23ºC (73ºF)<br>60ºC (140ºF)<br>23ºC (73ºF)<br>60ºC (140ºF)<br>23ºC (73ºF)<br>60ºC (140ºF) | 85% RH<br>50% RH<br>85% RH<br>50% RH<br>85% RH<br>50% RH<br>85% RH |

# BEFORE YOU BEGIN PROJECT 6-SAMSCLUB

Before You Begin Shock Testing

**Rotational Drop Tests of Type B Packaged-Products**
In the TEST BLOCKS, rotational flat drops and rotational edge drops for **Type B** packaged-products are required. In some orientations these types of drops are not possible, however, due to packaged-product configuration, dimensions, or other reasons. If a **Type B** packaged-product in a particular orientation topples over before a side or edge can be lifted to the required drop height, then the rotational drop is not possible. This may particularly be the situation for Flat and Elongated packaged-products in small-face-down orientations, but may occur for other configurations as well. Rotational flat and edge drops for **Type B** packaged-products are not required in orientations where such drops are not possible.

**Catching or Restraining Packaged-Products After Drop Testing**
Package tipover resulting in secondary impacts should be avoided when possible. Refer to *Guidelines for Selecting and Using ISTA Test Procedures and Projects* for recommendations, cautions, and documentation requirements. These apply both to free-fall and rotational (flat and edge) drop tests.

**Inclined or Horizontal Impacts**

- The required impact tests may be accomplished with either an inclined or horizontal machine. If an inclined-impact machine is used, the minimum required *impact velocity* must be 42 in/sec (3.5 ft/sec) (1.1 m/sec). If a horizontal-impact machine is used, the minimum required *velocity change* must be 42 in/sec (3.5 ft/sec) (1.1 m/sec) and the required shock must be a nominal 10 millisecond half sine pulse.
- If any velocity of an impact test is below the required minimum, that test must be repeated until velocity meets the minimum.

---

Before You Begin Vertical (Top-to-Bottom) Compression Testing

**Overview**
Vertical (top-to-bottom) compression tests are required for all packaged-product types covered by this project and formulas are used to calculate the compression test values. However, there are differences in the formulas and test details depending on packaged-product type, configuration, and other factors (see *Preface* on page 2 for Packaged-Product Type definitions):

- **Type A:** A pallet is placed on top of the test item. The compression test value is calculated according to the "Vertical Compression Test Force/Weight Determination" table following this Overview. The calculated force or weight is applied and held for one hour. The *minimum* required compression on the *bottom layer* of a Non-Perishable unitized load is 1500 lbf or lb (6670 N) (680 kg) for test items weighing 750 lb (340 kg) or less, and 2500 lbf or lb (11120 N) (1130 kg) for test items weighing over 750 lb (340 kg). Compression on the bottom layer consists of the *weight* of the upper layers plus any additional applied test compression.
- **Type B:** Compression tests may be required in multiple orientations, depending on actual shipment orientations as indicated by an approved container loading diagram. A pallet is placed on top of the test item if the top surface dimensions are equal to or greater than 45 *x* 37 in (1140 *x* 940 mm). The compression test value is calculated according to the "Vertical Compression Test Force/Weight Determination" table following this Overview. The force or weight is applied and held for one hour.
- **Type C:** Compression tests may be required in multiple orientations, depending on actual shipment orientations as indicated by an approved container loading diagram. No pallet is used on top of the test item. The compression test value is calculated according to the "Vertical Compression Test Force/Weight Determination" table following this Overview. The force or weight is applied and held for one hour.
- **Type D:** A pallet is placed on top of the test item. The compression test value is calculated according to the "Vertical Compression Test Force/Weight Determination" table following this Overview. The force or weight is applied and held for 30 seconds. The *minimum* required compression on the *bottom layer* of a Perishable unitized load is 1000 lbf or lb (4450 N) (455 kg). Compression on the bottom layer consists of the *weight* of the upper layers plus any additional applied test compression.

***NOTE:***
**In all cases, regardless of calculations in the table following, the *maximum* required compression test value is 7500 lbf or lb (33400 N) (3400 kg).**

***NOTE:***
**The trial calculation that follows is intended to determine which required formula will be used to calculate the compression testing value. Calculating the trial formula first assures that the required compression minimum will be met.**

Either a compression machine or a system of weight(s) and a load spreader may be used for these tests.

***CAUTION:***
When using weight(s) and a load spreader use extreme care to prevent injury. The use of safety stops is recommended to support the load spreader and weight(s) to prevent damage or injury in the event of a rapid collapse of the test item.

**Continued on next page**

# BEFORE YOU BEGIN PROJECT 6-SAMSCLUB

**Continued from previous page**

**Use the following table to determine the force or weight value to be used in the Vertical Compression Test Block (TEST BLOCK 4):**

| VERTICAL COMPRESSION TEST FORCE/WEIGHT DETERMINATION | | |
|---|---|---|
| **Step** | **Action** | |
| 1 | **IF…** | **THEN go to…** |
| | The packaged-product is **Type A** or **Type D** (Initially Shipped Palletized), or a **Type B** or **C** being tested as a **Type A** (see Notes on pages 5-7) | Step 3 of this table for further instructions.<br>***NOTE:*** The Trial Calculation that follows in Step 3 is intended to determine which of the required formulas in Steps 4 and 5 will be used to calculate the compression testing value. The Trial Calculation result assures that the required compression minimum on the bottom layer of a unitized load will be met. |
| | The packaged-product is **Type B** or **Type C** (Initially Shipped Floor-Loaded) | Step 2 of this table for calculation of the required test force or required total test weight. |
| 2 | For **Type B** and **C** packaged-products (Initially Shipped Floor-Loaded), determine the actual shipping orientations from an approved container loading diagram. Vertical compression testing is required in each shipping orientation axis, using compression values calculated from the formulas given in this Step. If there is not an applicable approved container loading diagram, the packaged-products must be tested in all three orientations.<br>Formula definitions:<br>V = vertical dimension of packaged-product when placed in an actual shipping orientation (in) (mm)<br>$W_G$ = gross weight of unitized load (lb) (kg)<br>M = compensating factor (use 2.5 for domestic shipment, 3.0 for international) | |
| | **IF testing will be performed with…** | **THEN…** Use the appropriate formula below to calculate the required compression test force or the total required compression test weight. |
| 2a | A compression testing machine | English Units: **Test Force (lbf) = [(108-V)/V] *x* $W_G$ *x* M**<br>If the result of the above calculation is greater than 7500 lbf, use 7500 lbf as the compression test force<br>Metric Units: **Test Force (N) = [(2745-V)/V] *x* $W_G$ *x* M *x* 9.8**<br>If the result of the above calculation is greater than 33400 N, use 33400 N as the compression test force |
| 2b | Weights and a load spreader | English Units: **Test Weight (lb) = [(108-V)/V] *x* $W_G$ *x* M**<br>If the result of the above calculation is greater than 7500 lb, use 7500 lb as the total compression test weight<br>Metric Units: **Test Weight (kg) = [(2745-V)/V] *x* $W_G$ *x* M**<br>If the result of the above calculation is greater than 3400 kg, use 3400 kg as the total compression test weight |
| 3 | For **Type A** and **D** packaged-products (Initially Shipped Palletized), first make a **trial calculation** as follows:<br>English Units → **Trial** (lbf) = {[(108-H)/H] *x* $W_G$ *x* M} + {(L-1) *x* $W_C$ *x* $N_L$}<br>Metric Units → **Trial** (N) = {[(2745-H)/H] *x* $W_G$ *x* M *x* 9.8} + {(L-1) *x* $W_C$ *x* $N_L$ *x* 9.8}<br>Where<br>H = overall height of unitized load (in) (mm)<br>L = number of layers in unitized load<br>$N_L$ = number of cases or units per layer<br>$W_G$ = gross weight of unitized load (lb) (kg)<br>$W_C$ = weight of a single case or unit of the load (lb) (kg)<br>M = compensating factor (use 2.5 for domestic shipment, 3.0 for international)<br>*Record the result of this* **trial calculation** *for later use.*<br>***NOTE:*** If the palletized test item does not have typical individual cases or units, and/or is not stacked in conventional layers (for example, a single large product on a custom pallet, or bundles of products not arranged in layers on a pallet, etc.), use L=1, $W_C$=$W_G$, and $N_L$=1. | |
| | **IF testing will be performed with…** | **THEN go to…** |
| | A compression testing machine | Step 4 of this table for calculation of the required compression test force. |
| | Weights and a load spreader | Step 5 of this table for calculation of the total required compression test weight. |

**Continued on next page**

# BEFORE YOU BEGIN PROJECT 6-SAMSCLUB

**Continued from previous page**

| VERTICAL COMPRESSION TEST FORCE/WEIGHT DETERMINATION (continued) | | |
|---|---|---|
| **Step** | **Action** | |
| 4 | **IF the packaged-product and conditions are…** | **THEN…**<br>Use the appropriate formula to calculate the required **compression test** force. |
| 4a | **Type A, Non-Perishable**, Initially Shipped Palletized **and**<br>• Weighing 750 lb (340 kg) or less **and**<br>• The result of the trial calculation from Step 3 of this chart is 1500 lbf (6670 N) or greater | English Units: **Test Force (lbf) = [(108-H)/H] *x* $W_G$ *x* M**<br>If the result of the above calculation is greater than 7500 lbf, use 7500 lbf as the compression test force<br>Metric Units: **Test Force (N) = [(2745-H)/H] *x* $W_G$ *x* M *x* 9.8**<br>If the result of the above calculation is greater than 33400 N, use 33400 N as the compression test force |
| 4b | **Type A, Non-Perishable**, Initially Shipped Palletized **and**<br>• Weighing 750 lb (340 kg) or less **and**<br>• The result of the trial calculation from Step 3 of this chart is less than 1500 lbf (6670 N) | English Units: **Test Force (lbf) = 1500 – [(L-1) *x* $W_C$ *x* $N_L$]**<br>Metric Units: **Test Force (N) = 6664 – [(L-1) *x* $W_C$ *x* $N_L$ *x* 9.8]** |
| 4c | **Type A, Non-Perishable**, Initially Shipped Palletized **and**<br>• Weighing over 750 lb (340 kg) **and**<br>• The result of the trial calculation from Step 3 of this chart is 2500 lbf (11120 N) or greater | English Units: **Test Force (lbf) = [(108-H)/H] *x* $W_G$ *x* M**<br>If the result of the above calculation is greater than 7500 lbf, use 7500 lbf as the compression test force<br>Metric Units: **Test Force (N) = [(2745-H)/H] *x* $W_G$ *x* M *x* 9.8**<br>If the result of the above calculation is greater than 33400 N, use 33400 N as the compression test force |
| 4d | **Type A, Non-Perishable**, Initially Shipped Palletized **and**<br>• Weighing over 750 lb (340 kg) **and**<br>• The result of the trial calculation from Step 3 of this chart is less than 2500 lbf (11120 N) | English Units: **Test Force (lbf) = 2500 – [(L-1) *x* $W_C$ *x* $N_L$]**<br>Metric Units: **Test Force (N) = 11120 – [(L-1) *x* $W_C$ *x* $N_L$ *x* 9.8]** |
| 4e | **Type D, Perishable**, Initially Shipped Palletized **and**<br>• The result of the trial calculation from Step 3 of this chart is 1000 lbf (4450 N) or greater | English Units: **Test Force (lbf) = [(108-H)/H] *x* $W_G$ *x* M**<br>If the result of the above calculation is greater than 7500 lbf, use 7500 lbf as the compression test force<br>Metric Units: **Test Force (N) = [(2745-H)/H] *x* $W_G$ *x* M *x* 9.8**<br>If the result of the above calculation is greater than 33400 N, use 33400 N as the compression test force |
| 4f | **Type D, Perishable**, Initially Shipped Palletized **and**<br>• The result of the trial calculation from Step 3 of this chart is less than 1000 lbf (4450 N) | English Units: **Test Force (lbf) = 1000 – [(L-1) *x* $W_C$ *x* $N_L$]**<br>Metric Units: **Test Force (N) = 4445 – [(L-1) *x* $W_C$ *x* $N_L$ *x* 9.8]** |

**Continued on next page**

# BEFORE YOU BEGIN PROJECT 6-SAMSCLUB

**Continued from previous page**

| VERTICAL COMPRESSION TEST FORCE/WEIGHT DETERMINATION (continued) | | |
|---|---|---|
| **Step** | **Action** | |
| 5 | **IF the packaged-product and conditions are…** | **THEN…** Use the appropriate formula to calculate the total required **compression test weight** (weights + load spreader). |
| 5a | **Type A, Non-Perishable**, Initially Shipped Palletized **and**<br>• Weighing 750 lb (340 kg) or less **and**<br>• The result of the trial calculation from Step 3 of this chart is 1500 lbf (6670 N) or greater | English Units: **Test Weight (lb) = [(108-H)/H] *x* $W_G$ *x* M**<br>If the result of the above calculation is greater than 7500 lb, use 7500 lb as the total compression test weight<br>Metric Units: **Test Weight (kg) = [(2745-H)/H] *x* $W_G$ *x* M**<br>If the result of the above calculation is greater than 3400 kg, use 3400 kg as the total compression test weight |
| 5b | **Type A, Non-Perishable**, Initially Shipped Palletized **and**<br>• Weighing 750 lb (340 kg) or less **and**<br>• The result of the trial calculation from Step 3 of this chart is less than 1500 lbf (6670 N) | English Units: **Test Weight (lb) = 1500 – [(L-1) *x* $W_C$ *x* $N_L$]**<br>Metric Units: **Test Weight (kg) = 680 – [(L-1) *x* $W_C$ *x* $N_L$]** |
| 5c | **Type A, Non-Perishable**, Initially Shipped Palletized **and**<br>• Weighing over 750 lb (340 kg) **and**<br>• The result of the trial calculation from Step 3 of this chart is 2500 lbf (11120 N) or greater | English Units: **Test Weight (lb) = [(108-H)/H] *x* $W_G$ *x* M**<br>If the result of the above calculation is greater than 7500 lb, use 7500 lb as the total compression test weight<br>Metric Units: **Test Weight (kg) = [(2745-H)/H] *x* $W_G$ *x* M**<br>If the result of the above calculation is greater than 3400 kg, use 3400 kg as the total compression test weight |
| 5d | **Type A, Non-Perishable**, Initially Shipped Palletized **and**<br>• Weighing over 750 lb (340 kg) **and**<br>• The result of the trial calculation from Step 3 of this chart is less than 2500 lbf (11120 N) | English Units: **Test Weight (lb) = 2500 – [(L-1) *x* $W_C$ *x* $N_L$]**<br>Metric Units: **Test Weight (kg) = 1135 – [(L-1) *x* $W_C$ *x* $N_L$]** |
| 5e | **Type D, Perishable**, Initially Shipped Palletized **and**<br>• The result of the trial calculation from Step 3 of this chart is 1000 lbf (4450 N) or greater | English Units: **Test Weight (lb) = [(108-H)/H] *x* $W_G$ *x* M**<br>If the result of the above calculation is greater than 7500 lb, use 7500 lb as the total compression test weight<br>Metric Units: **Test Weight (kg) = [(2745-H)/H] *x* $W_G$ *x* M**<br>If the result of the above calculation is greater than 3400 kg, use 3400 kg as the total compression test weight |
| 5f | **Type D, Perishable**, Initially Shipped Palletized **and**<br>• The result of the trial calculation from Step 3 of this chart is less than 1000 lbf (4450 N) | English Units: **Test Weight (lb) = 1000 – [(L-1) *x* $W_C$ *x* $N_L$]**<br>Metric Units: **Test Weight (kg) = 455 – [(L-1) *x* $W_C$ *x* $N_L$]** |

**Vertical Compression Test Force/Weight Determination Examples on next page**

# BEFORE YOU BEGIN PROJECT 6-SAMSCLUB

**Continued from previous page**

**Vertical Compression Test Force/Weight Determination Examples:**

1. For packaged-product **Type C, Non-Perishable**, Initially Shipped Floor-Loaded, to be tested with a compression test machine, and with the following characteristics:

   V = 26 in (660 mm) $W_G$ = 44 lb (20 kg) M = 3.0 (international shipment, the initial point of origin is outside the U.S.)

   From Step 2a of the previous table, the required compression test force is:
   English units → Test Force (lbf) = [(108-26)/26] *x* 44 *x* 3.0 = **416 lbf**
   Metric units → Test Force (N) = [(2745-660)/660] *x* 20 *x* 3.0 *x* 9.8 = **1857 N**

2. For packaged-product **Type A**, **Non-Perishable**, Initially Shipped on Standard or Custom Pallet, to be tested with a compression test machine, and with the following characteristics:

   H = 31 in (785 mm) $W_G$ = 1150 lb (520 kg) L = 2 $W_C$ = 260 lb (118 kg) $N_L$ = 2
   M = 3.0 (international shipment, the initial point of origin is outside the U.S.)

   Trial calculation, English units → Trial (lbf) = {[(108-31)/31] *x* 1150 *x* 3} + {(2-1) *x* 260 *x* 2} = **9089 lbf**
   Trial calculation, Metric units → Trial (N) = {[(2745-785)/785] *x* 520 *x* 3 *x* 9.8} + {(2-1) *x* 118 *x* 2 *x* 9.8} = **40484 N**

   From Step 4c of the previous table, the required compression test force is:
   English units → Test Force (lbf) = [(108-31)/31] *x* 1150 *x* 3 = 8570 lbf
   In accordance with Step 4c, since this result exceeds 7500 lbf, **use 7500 lbf as the compression test force**
   Metric units → Test Force (N) = [(2745-785)/785] *x* 520 *x* 3 *x* 9.8 = 38170 N
   In accordance with Step 4c, since this result exceeds 33400 N, **use 33400 N as the compression test force**

3. For packaged-product **Type A**, **Non-Perishable**, Initially Shipped on Standard or Custom Pallet, to be tested with a compression test machine, and with the following characteristics:

   H = 40 in (1016 mm) $W_G$ = 300 lb (136 kg) L = 5 $W_C$ = 4.4 lb (2 kg) $N_L$ = 10
   M = 2.5 (domestic shipment, the initial point of origin is within the U.S.)

   Trial calculation, English units → Trial (lbf) = {[(108-40)/40] *x* 300 *x* 2.5} + {(5-1) *x* 4.4 *x* 10} = **1451 lbf**
   Trial calculation, Metric units → Trial (N) = {[(2745-1016)/1016] *x* 136 *x* 2.5 *x* 9.8} + {(5-1) *x* 2 *x* 10 *x* 9.8} = **6454 N**

   From Step 4b of the previous table, the required compression test force is:
   English units → Test Force (lbf) = 1500 – [(5-1) x 4.4 x 10] = **1324 lbf**
   Metric units → Test Force (N) = 6664 – [(5-1) x 2 x 10 *x* 9.8] = **5880 N**

4. For packaged-product **Type D**, **Perishable**, Initially Shipped Palletized, to be tested with weight(s) and a load spreader, and with the following characteristics:

   H = 50 in (1270 mm) $W_G$ = 1125 lb (510 kg) L = 6 $W_C$ = 22 lb (10 kg) $N_L$ = 9
   M = 3.0 (international shipment, the initial point of origin is outside the U.S.)

   Trial calculation, English units → Trial (lbf) = {[(108-50)/50] *x* 1125 *x* 3.0} + {(6-1) *x* 22 *x* 9} = **4905 lbf**
   Trial calculation, Metric units → Trial (N) = {[(2745-1270)/1270] *x* 510 *x* 3.0 *x* 9.8} + {(6-1) *x* 10 *x* 9 *x* 9.8} = **21824 N**

   From Step 5e of the previous table, the required total test weight (weights + load spreader) is:
   English units → Test Weight (lb) = [(108-50)/50] *x* 1125 *x* 3.0 = **3915 lb**
   Metric units → Test Weight (kg) = [(2745-1270)/1270] *x* 510 *x* 3.0 = **1777 kg**

# BEFORE YOU BEGIN PROJECT 6-SAMSCLUB

**When Horizontal Compression (Clamp Testing) is Required**

Horizontal compression (clamping simulation) tests are only required in certain situations as follows:

1. For **Type A**, **Non-Perishable**, Initially Shipped on Standard or Custom Pallet, where the Club (Store) Quantity is *not* the unchanged palletized load
   a. If the Club (Store) Quantity is one or more complete layers from the load, clamp testing of individual cases or units is required in both horizontal directions. No clamp test is required if the Club (Store) Quantity is individual loose cases.
   b. If packaged-products from the original pallet load can, at some point in the distribution system, arrive at a Distribution Center (DC) not on a pallet, clamp testing of individual cases or units is required in all three axes. Information regarding the distribution system may be obtained from the shipper, Sam's Club buyer, or Sam's Club Packaging department.
   c. If both a. and b. above apply, use b.
2. For **Types B** and **C**, **Non-Perishables**, Initially Shipped Floor-Loaded
   a. If the packaged-product's initial point of origin is outside the U.S. (**International** Shipment), clamp testing is required. Clamp test orientations to be determined from the approved container loading diagram.
   b. If packaged-products can, at some point in the distribution system, arrive at a Distribution Center (DC) not on a pallet, clamp testing is required in all three axes. Information regarding the distribution system may be obtained from the shipper, Sam's Club buyer, or Sam's Club Packaging department.
   c. If both a. and b. above apply, use b.
   d. If the test item is *unitized* and is initially shipped *without* a slipsheet, but is ultimately placed on a pallet for shipment *as a unit* to the club (store), clamp testing is required in both horizontal directions.
3. No clamping tests are required for **Type D**, **Perishable** packaged-products or for Pails/Cylinders.

**Clamp Testing Configuration and Forces**

The clamp test force must be applied with the clamping platens positioned 3 in (76 mm) up and 3 in (76 mm) over from one corner of the item to be tested, as shown in the figure at right.

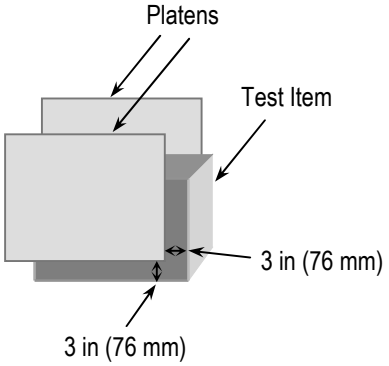


The following formulas are used to calculate required clamp test forces:

- English Units → **Test Force (lbf) = 4 *x* W *x* 48/D**
- Metric Units → **Test Force (N) = 39.2 *x* W *x* 1220/D**

Where **W** is the test item weight (lbs) (kg)
**D** is a packaged-product dimension (in) (mm), as follows:

- For situations 1a and 2d above, **D** is the smallest package or unitized load dimension in the horizontal directions, usually the width dimension (the distance between faces 2 & 4).
- For situations 1b and 2b above, **D** is the smallest of the package length, width, and height dimensions.
- For situation 2a above, **D** is the smallest package dimension in the horizontal directions if there is only *one* shipping orientation, otherwise **D** is the smallest of the package length, width, and height dimensions.

**The minimum required clamp test force is 400 lbf (1800 N).** If the result of the above calculation is less than this minimum, use 400 lbf (1800 N) as the clamp test force.

**The maximum required clamp test force is 2000 lbf (8900 N).** If the result of the above calculation is greater than this maximum, use 2000 lbf (8900 N) as the clamp test force.

**Example:**

For a test item weighing 110 lb (50 kg) and with a package dimension of 30 in (762 mm) as defined above, the required clamp test force is:

English units → Clamp Test Force (lbf) = 4 *x* 110 *x* 48/30 = **704 lbf**
Metric units → Clamp Test Force (N) = 39.2 x 50 x 1220/762 = **3138 N**

# BEFORE YOU BEGIN PROJECT 6-SAMSCLUB

***CAUTION:***

A restraining device or devices (fixturing) shall be used with the vibration test system to:

1. Prevent the test specimen from moving off the platform **and**
2. Prevent any Top-Load from moving off the packaged-product being tested **and**
3. Maintain test orientation of any stack of packaged-products, **but**
4. The device or devices shall not restrict the vertical motion of the test specimen during the test.

**VIBRATION SPECTRA**

1. **Spectrum for Type A, Palletized Loads** and **Types B** and **C Individual Floor-Loaded Items**.

   The breakpoints below shall be programmed into the vibration test system controller to achieve the indicated spectrum shape and overall Grms level.

| Frequency, Hz. | PSD, $G^2$/Hz. |
|---|---|
| 1.6 | 0.00090 |
| 3.4 | 0.04750 |
| 4.3 | 0.04750 |
| 7 | 0.00175 |
| 13 | 0.00175 |
| 15 | 0.00450 |
| 20 | 0.00450 |
| 30 | 0.00063 |
| 80 | 0.00063 |
| 200 | 0.00006 |
| **Overall Grms = 0.464** | |
| **Theoretical Pk-Pk Stroke = 1.556 in (39.5 mm)** | |
| **Test Duration = 3 hrs.** | |

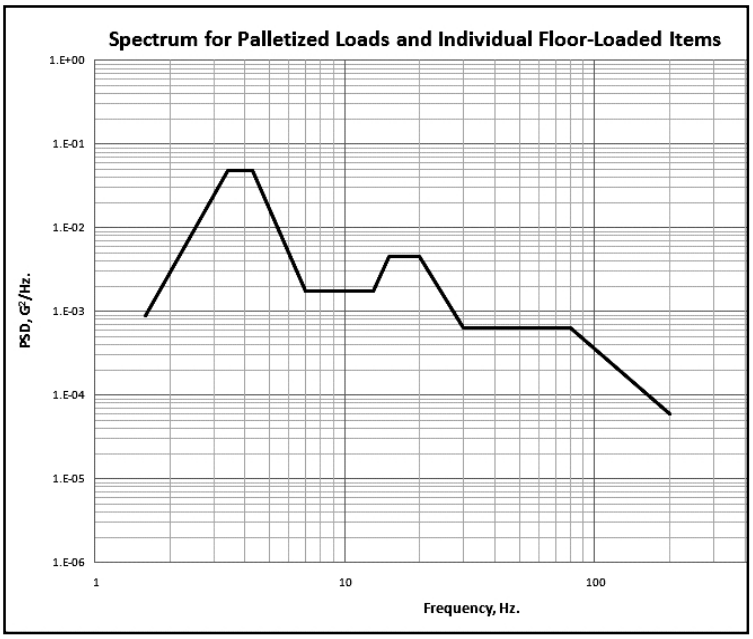


2. **Spectrum for Stacked Packages**, used for **Type A**, **Non-Perishable** test specimens when three individual packaged-products are selected from the palletized load and stacked, as specified in TEST BLOCK 12.

   The breakpoints below shall be programmed into the vibration test system controller to achieve the indicated spectrum shape and overall Grms level.

| Frequency, Hz. | PSD, $G^2$/Hz. |
|---|---|
| 1.6 | 0.00050 |
| 3.4 | 0.06500 |
| 4.3 | 0.06500 |
| 6 | 0.00260 |
| 11 | 0.00260 |
| 13 | 0.00405 |
| 20 | 0.00405 |
| 30 | 0.00115 |
| 68 | 0.00115 |
| 80 | 0.00090 |
| 200 | 0.00030 |
| **Overall Grms = 0.552** | |
| **Theoretical Pk-Pk Stroke = 1.649 in (41.9 mm)** | |
| **Test Duration = 1 hr.** | |

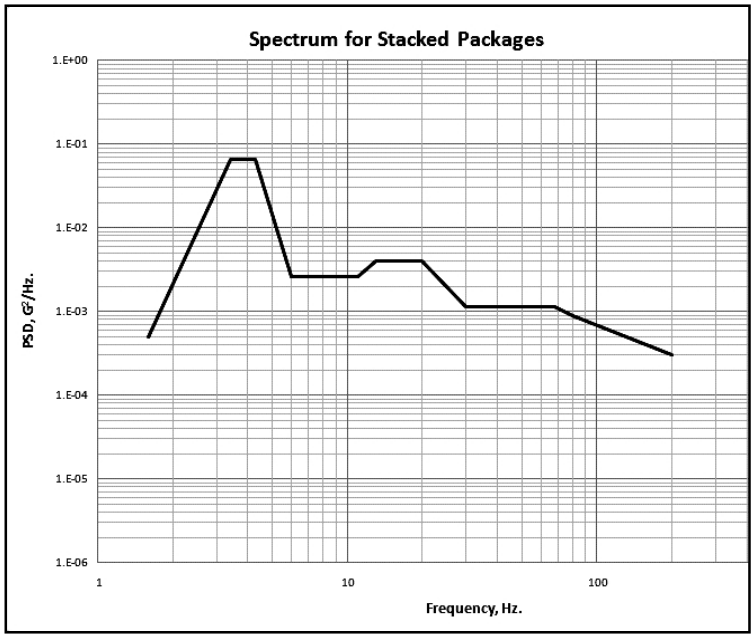


3. **Vibration testing** is not required for **Type D, Perishable**.

# BEFORE YOU BEGIN PROJECT 6-SAMSCLUB

## VIBRATION TOP LOAD

### Overview

Vibration tests of packaged-product **Types B** and **C**, **Non-Perishable**, Initially Shipped Floor-Loaded require that a weight or weights (top load) be placed on the test item as shown in the *Equipment Required Additional, Vibration Top Load Apparatus* section. The following explains how to determine and configure this top load.

### Top Load Apparatus Axis Definitions

The Top Load Apparatus shall be defined as:

- **TL-H** for the Apparatus used when the packaged-product is positioned for testing with **face 1** or **face 3** down.
- **TL-W** for the Apparatus used when the packaged-product is positioned for testing with **face 2** or **face 4** down.
- **TL-L** for the Apparatus used when the packaged-product is positioned for testing with **face 5** or **face 6** down.

### Determination of Vibration Top Load

- First, calculate the theoretical top loads from the **Total Theoretical Top Loads** table below.
- Next, determine the number of apparatus required from the **Division of Top Load Apparatus** table at the bottom of this page.
- Then, go to the **Determination of Top Load Apparatus Weight** table on the next page to determine the actual weights of the top loads to be used.

***NOTE:*** Different Top Loads may be required depending upon the packaged-product dimensions and how it is oriented for the vibration tests.

| **Total Theoretical Top Loads** | | | |
|---|---|---|---|
| **Total Theoretical Top Load Formulas** | | **English Units (in), Load Results in lb** | **Metric Units (m), Load Results in kg** |
| Theoretical Top Load with **face 1** or **face 3** down | | (108 – H) x L x W x 0.0035 | (2.7 – H) x L x W x 96 |
| Theoretical Top Load with **face 2** or **face 4** down | | (108 – W) x L x H x 0.0035 | (2.7 – W) x L x H x 96 |
| Theoretical Top Load with **face 5** or **face 6** down | | (108 – L) x W x H x 0.0035 | (2.7 – L) x W x H x 96 |
| **Where** | **Represents** | | |
| 108 and 2.7 | Height of typical trailer or ocean container | Inches (in) | Meters (m) |
| L | Length of shipping unit (test item) | Inches (in) | Meters (m) |
| W | Width of shipping unit (test item) | Inches (in) | Meters (m) |
| H | Height of shipping unit (test item) | Inches (in) | Meters (m) |
| 0.0035 and 96 | Dynamic loading factor: 50% of the average static density of freight | 0.0035 lb/in$^3$ | 96 kg/m$^3$ |
| ***NOTE:*** **For Packaged-Products 30 lb (14 kg) or 2 ft$^3$ (0.06 m$^3$) or less, divide the above results by 2.** | | | |

| **Division of Top Load Apparatus**<br>To determine if and how the vibration Top Load should be divided, orient the packaged-product for testing and follow the instructions below: | |
|---|---|
| **IF the packaged-product top surface when in the testing orientation exceeds 18 inches (460 mm) in…** | **THEN there shall be…** |
| **neither** dimension | an *undivided* Top Load apparatus. |
| **only** one dimension | A *two portion* Top Load apparatus, with the two separate portions of equal size and weight and divided along the packaged-product's longer dimension. |
| **both** dimensions | a *four portion* Top Load apparatus with the four separate portions of equal size and weight. |

**Continued on next page**

# BEFORE YOU BEGIN PROJECT 6-SAMSCLUB

**Continued from previous page**

| **Determination of Top Load Apparatus Weight**<br>Determine the Top Load Apparatus weight (or weights, for multiple apparatus) to be used for vibration tests as follows: | |
|---|---|
| **IF the calculation from the Total Theoretical Top Loads table (previous page) for an axis is …** | **THEN …** |
| Less than 25 lb (11kg) | **Do not use** a Top Load Apparatus for that axis during vibration testing. |
| 25 lb (11 kg) or greater **and** an undivided Top Load Apparatus is required | Round the Total Theoretical Top Load value up to the nearest 5 lb (2 kg) and use the rounded weight value as the total Top Load Apparatus weight for that axis. |
| 25 lb (11 kg) or greater **and two** equal Top Load Apparatus are required | Divide the Total Theoretical Top Load value by 2, then round the result up to the nearest 2 lb (1 kg) and use the rounded weight value as the weight for each of the two Top Load Apparatus for that axis. |
| 25 lb (11 kg) or greater **and four** equal Top Load Apparatus are required | Divide the Total Theoretical Top Load value by 4, then round the result up to the nearest 1 lb (0.5 kg) and use the rounded weight value as the weight for each of the four Top Load Apparatus for that axis. |

***Examples*:**

- If the Total Theoretical Top Load value is 166 lb (75.3 kg) and only one Top Load Apparatus is required, round up to the nearest 5 lb (2 kg) and use 170 lb (or 76 kg) as the Top Load Apparatus weight.
- If the Total Theoretical Top Load value is 166 lb (75.3 kg) and two Top Load Apparatus are required, divide by 2 to get 83 lb (37.6 kg), round up to the nearest 2 lb (1 kg) and use 84 lb (or 38 kg) as the weight of each of the two Top Load Apparatus.
- If the Total Theoretical Top Load value is 166 lb (75.3 kg) and four Top Load Apparatus are required, divide by 4 to get 41.5 lb (18.8 kg), round up to the nearest 1 lb (0.5 kg) and use 42 lb (or 19 kg) as the weight of each of the four Top Load Apparatus.

## STACKING PACKAGED-PRODUCTS FOR VIBRATION TESTING

### Overview

When shipment to the club (store) from a DC or other point of origin consists of mixed cases on a pallet [typical for many health and beauty aids (HBA), many over-the-counter pharmaceuticals (OTC), and many office supplies, etc.] taken from **Type A**, **Non-Perishable, Palletized** original shipments, a stacked vibration test of three samples is required. The following describes stack configurations and selection.

### Stack Configurations and Package Orientations

| Configuration (Illustrations at Right) | **Orientation of Packages** | | |
|---|---|---|---|
| | Bottom Package | Middle Package | Top Package |
| A | One of the largest faces down | One of the second-largest faces down | One of the smallest faces down |
| B | One of the largest faces down | One of the second-largest faces down | The opposite second-largest face down |
| C | One of the largest faces down | The opposite largest face down, package turned 90° in a horizontal plane from the package below | One of the second-largest faces down |
| D | One of the largest faces down | One of the largest faces down, package turned 90° in a horizontal plane from the package below | Same side down and alignment as bottom package |

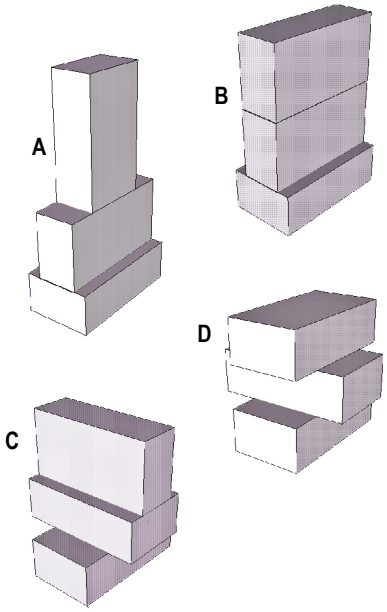


**Continued on next page**

# BEFORE YOU BEGIN PROJECT 6-SAMSCLUB

**Continued from previous page**

**Determination of Stack Configuration**

To determine which stack configuration to use for a particular set of packaged-products, follow the instructions below:

| Determination of Stack Configuration | | | | |
|---|---|---|---|---|
| **Step** | **Action** | | | |
| 1 | **IF the packaged-product…** | | **THEN go to…** | |
| | Can only be handled and shipped in one orientation, such as many liquid-containing packages, an open-top tray or similar, etc. | | Step 2 of this table. | |
| | Can be handled and shipped in any orientation | | Step 3 of this table. | |
| 2 | Use Stack Configuration D as described and illustrated on the previous page, with all packaged-products in their upright handling/shipping orientations. | | | |
| 3 | Calculate the height, using the particular set of packaged-products to be tested, of each stack configuration described and illustrated on the previous page. Then, starting with Sequence #1 of this Step below, determine the Stack Configuration to use. | | | |
| | **Sequence #** | **Action** | | |
| | | **IF Calculated Height for Stack Configuration…** | **Is 90 in (2.3 m) or less, THEN…** | **Is Greater than 90 in (2.3 m), THEN…** |
| | 1 | A | Use Stack Configuration A for Stacked Vibration test | Go to Sequence #2 below |
| | 2 | B | Use Stack Configuration B for Stacked Vibration test | Go to Sequence #3 below |
| | 3 | C | Use Stack Configuration C for Stacked Vibration test | Go to Sequence #4 below |
| | 4 | D | Use Stack Configuration D for the Stacked Vibration test. Invert the middle package compared to the bottom and top packages, i.e. with its *opposite* large face down compared to the other two packages. | Go to Sequence #5 below |
| | 5 | Do not stack the packages. Test each packaged-product with one of the largest faces down and in direct contact with the vibration system's platform. Multiple specimens may be tested simultaneously if the vibration system's platform is large enough to accommodate them. | | |

***NOTE:***

For Pails/Cylinders, stack all three packages bottom down.

***NOTE:***

Document in the Test Report all details of the stack configuration used, including stack type (A, B, C, or D) and which face of each package, according to the *Identification of Faces, Edges, and Corners (Test Specimen Members)* section, is oriented down.

# TEST SEQUENCE FOR PROJECT 6-SAMSCLUB

The following TEST BLOCKS contain tables indicating the required steps for each test in the procedure. Start with TEST BLOCK 1 below for all packaged-product types covered by this procedure.

***NOTE:***
If the test item is *unitized* and initially shipped floor-loaded on a slipsheet, but is ultimately placed on a pallet for shipment *as a unit* to the club or store, place it on an industry-standard pallet prior to starting these tests and consider it as a **Type A, Non-Perishable, Initially Shipped on Standard or Custom Pallet** throughout this procedure. Properly secure it to the pallet with several layers of stretch wrap, with strapping, or with other appropriate means. If such a test item is initially shipped *without* a slipsheet, see instructions in Step 10 below.

**TEST BLOCK 1 Atmospheric Conditioning, Temperature and Humidity**

| ATMOSPHERIC CONDITIONING, TEMPERATURE AND HUMIDITY | | |
|---|---|---|
| **Step** | **Action** | |
| 1 | **IF the packaged-product type is…** | **THEN go to…** |
| | **Types A**, **B**, or **C**, **Non-Perishable** | Step 2 of this TEST BLOCK. |
| | **Type D**, **Perishable** | Step 4 of this TEST BLOCK. |
| 2 | Atmospheric preconditioning: The packaged-product must be stored at laboratory ambient temperature and humidity for not less than twelve (12) hours prior to testing. | |
| 3 | Is atmospheric conditioning going to be performed (optional for Non-Perishable packaged-products)?<br>• If **Yes**, go to the next Step of this TEST BLOCK.<br>• If **No**, go to Step 8 of this TEST BLOCK. | |
| 4 | Select a temperature and humidity condition from *Before You Begin Atmospheric Conditioning*.<br>• For **Types A**, **B**, or **C Non-Perishables**, any condition may be chosen as appropriate.<br>• For **Type D, Perishables**, select *Cool*, *Cold*, or *Frozen* according to the required distribution conditions. | |
| 5 | Check the conditioning apparatus to insure that the temperature and humidity are at the required levels. | |
| 6 | Place the packaged-product in the conditioning apparatus for the specified time. | |
| 7 | At the completion of the selected conditioning, remove the packaged-product from the conditioning apparatus. | |
| 8 | Conditioning is now complete. When testing starts (according to the appropriate TEST BLOCK as indicated below), record the ambient temperature and humidity. At the end of all testing record the ambient temperature and humidity. | |
| 9 | Perform the remaining test sequences as quickly as possible. The best approach is to perform all tests directly in the conditioned atmosphere as appropriate. If this is not possible, then tests should be performed quickly after removal of test items from the conditioned atmosphere, and items should be returned periodically to conditioning as necessary to maintain the required control. Temperature and humidity should be recorded on the test report, along with amount of time the item was returned to conditioning. | |
| 10 | This Atmospheric Conditioning, Temperature and Humidity TEST BLOCK is now complete. Determine the next TEST BLOCK to be used as follows: | |
| | **IF the packaged-product type is…** | **THEN go to…** |
| | • **Type A, Non-Perishable**, Initially Shipped on Standard or Custom Pallet **or**<br>• **Type B, Non-Perishable, Defined as *Large***, Initially Shipped Floor-Loaded, Club Quantity is Case or Unit | TEST BLOCK 2 (Shock: Inclined or Horizontal Impact). |
| | • **Type C, Non-Perishable, Defined as *Small*, Initially Shipped Floor-Loaded**, Club Quantity is Case or Unit | TEST BLOCK 6 (Shock: Free-Fall Drop, Multiple Orientations, First Sequence). |
| | • **Type B** or **Type C, Non-Perishable**, initially shipped *unitized* and *without* a slipsheet, but ultimately placed on a pallet for shipment *as a unit* to the club (store) | TEST BLOCK 10 [Compression: Horizontal (Clamping Simulation)] |
| | • **Type D, Perishable**, Initially Shipped Palletized | TEST BLOCK 9 (Shock: Rotational EDGE Drop). |

# TEST SEQUENCE FOR PROJECT 6-SAMSCLUB

## SHOCK: INCLINED OR HORIZONTAL IMPACT

Complete this TEST BLOCK for the following types of packaged-products only:

- **Type A, Non-Perishable**, Initially Shipped on Standard or Custom Pallet (this is a test of the entire pallet load) **or**
- **Type B, Non-Perishable, Defined as *Large***, Initially Shipped Floor-Loaded, Club Quantity is Case or Unit
- **Types B** or **C**, Initially Shipped Floor-Loaded, *unitized* and *without* a slipsheet, ultimately placed on a pallet for shipment *as a unit* to the club (store); secured to a standard pallet at the conclusion of TEST BLOCK 10

These impact tests may be performed with an inclined or horizontal impact machine.

| Step | Action | |
|---|---|---|
| 1 | **IF the packaged-product type is…** | **THEN go to…** |
| | • **Type A, Non-Perishable**, Initially Shipped on a Standard or Custom Pallet **or**<br>• **Type B, Non-Perishable, *Large***, Initially Shipped Floor-Loaded, with a configuration which necessitates only a single particular shipping orientation **or**<br>• **Types B** or **C**, Initially Shipped Floor-Loaded, *unitized*, ultimately placed on a pallet for shipment *as a unit* to the club (store); secured to a standard pallet for this testing | Step 2 of this TEST BLOCK. |
| | • **Type B, Non-Perishable, *Large***, Initially Shipped Floor-Loaded, with a configuration which allows multiple shipping orientations and/or with multiple shipping orientations indicated on an approved container loading diagram | Step 3 of this TEST BLOCK. |
| 2 | Center the packaged-product in the proper orientation (see below) on the carriage, with its front surface in contact with the backstop or sail and parallel to the leading edge of the carriage. If the packaged-product is a palletized load and the load footprint is smaller than the pallet top surface (an underhung load), place the front edge of the pallet in contact the backstop or sail and parallel to the leading edge of the carriage. In this case there will be a gap between the front surface of the load and the backstop or sail.<br>Impact test each of the packaged-product's vertical faces as described in Step 4 of this TEST BLOCK. **Impact the faces in the following order: Face 5, Face 6, Face 2, Face 4**. Then go to Step 5 of this TEST BLOCK. | |
| 3 | Center the packaged-product in the proper orientation (see below) on the carriage, with its front surface in contact with the backstop or sail and parallel to the leading edge of the carriage.<br>Impact all (typically six) of the packaged-product's faces as described in Step 4 of this TEST BLOCK. **Impact the faces in the following order: Face 5, Face 6, Face 2, Face 4, Face 1, Face 3**. Then go to Step 5 of this TEST BLOCK. | |
| 4 | Draw the carriage back and impact test the packaged-product on each of the faces as directed. The minimum required *impact velocity* for an inclined-impact test is 42 in/sec (3.5 ft/sec) (1.1 m/sec). The minimum required *velocity change* for a horizontal impact test is 42 in/sec (3.5 ft/sec) (1.1 m/sec) and the shock must be a nominal 10 millisecond half sine pulse. If any velocity in the Test Sequence is below the required minimum value, that sequence event must be repeated until the test velocity meets the minimum.<br> 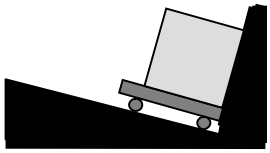 <br>*Inclined Impact*<br> 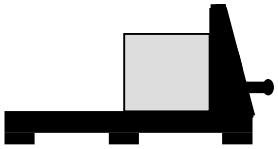 <br>*Horizontal Impact*<br> 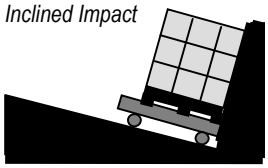 <br> 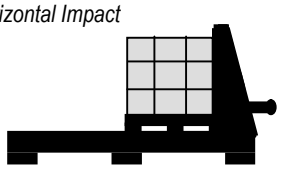 | |
| 5 | This Shock: Inclined or Horizontal Impact TEST BLOCK is now complete. Go to TEST BLOCK 3 (Shock: Rotational FLAT Drop). | |

# TEST SEQUENCE FOR PROJECT 6-SAMSCLUB

## SHOCK: ROTATIONAL FLAT DROP

Complete this TEST BLOCK for the following types of packaged-products only, using the drop heights indicated:

- **Type A, Non-Perishable**, Initially Shipped on Standard or Custom Pallet (this is a test of the entire pallet load) **or**
- **Type B** or **C, Non-Perishable**, *unitized*, being tested as **Type A** (see Notes on pages 5-7) **or**
- **Type B, Non-Perishable, Defined as *Large***, Initially Shipped Floor-Loaded, Club Quantity is Case or Unit

The test is performed starting with the test item resting on a flat, rigid surface such as steel or concrete. Lift one edge to the prescribed drop height. Quickly release the edge so that the test item falls freely.

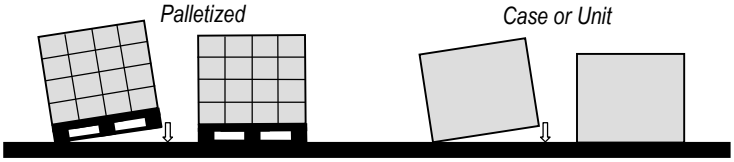


| Step | Action | | |
|---|---|---|---|
| 1 | Determine the drop heights required for this test as follows: | | |
| | **IF the packaged-product is…** | **THEN the required drop height is…** | |
| | | For **International** Shipment (initial origin outside the U.S.) | For **Domestic** Shipment (initial origin within the U.S.) |
| | **Type A, Non-Perishable**, Initially Shipped on a Pallet | 8 in (200 mm) | 6 in (150 mm) |
| | **Type B, Non-Perishable**, ***Large***, Initially Shipped Floor-Loaded | 9 in (230 mm) | 7 in (180 mm) |

| Step | Action | |
|---|---|---|
| 2 | Determine the next Step of this TEST BLOCK to be used as follows: | |
| | **IF the packaged-product type is…** | **THEN go to…** |
| | • **Type A, Non-Perishable**, Initially Shipped on a Pallet **or**<br>• **Type B, Non-Perishable, *Large***, Initially Shipped Floor-Loaded, with a configuration which necessitates only a single particular shipping orientation | Step 3 of this TEST BLOCK. |
| | • **Type B, Non-Perishable, *Large***, Initially Shipped Floor-Loaded, with a configuration which allows multiple shipping orientations, and there is *not* an applicable approved container loading diagram | Step 4 of this TEST BLOCK. |
| | • **Type B, Non-Perishable**, ***Large***, Initially Shipped Floor-Loaded, and there *is* an applicable approved container loading diagram | Step 5 of this TEST BLOCK. |

| Step | Sequence # | Action | |
|---|---|---|---|
| 3 | 1 | Place the packaged-product on a flat, rigid surface such as steel or concrete with face 3 down. | |
| | 2 | Lift edge 3-5 to the drop height prescribed in Step 1 of this TEST BLOCK. Quickly release the edge so that the test item falls freely. | |
| | 3 | Lift edge 3-4 to the drop height prescribed in Step 1 of this TEST BLOCK. Quickly release the edge so that the test item falls freely. | |
| | 4 | Go to Step 6 of this TEST BLOCK. | |
| 4 | 1 | Place the packaged-product on a flat, rigid surface such as steel or concrete with face 3 down. | |
| | 2 | Is it possible to lift edge 3-5 to the drop height prescribed in Step 1 of this TEST BLOCK without the test item toppling over (see the *Before You Begin Shock Testing* section)? | |
| | | **IF Yes…** | Lift edge 3-5 to the drop height prescribed in Step 1 of this TEST BLOCK. Quickly release the edge so that the test item falls freely. Then go to Sequence #3 of this Step below. |
| | | **IF No…** | Go to Sequence #3 of this Step below. |
| | 3 | Is it possible to lift edge 3-4 to the drop height prescribed in Step 1 of this TEST BLOCK without the test item toppling over (see the *Before You Begin Shock Testing* section)? | |
| | | **IF Yes…** | Lift edge 3-4 to the drop height prescribed in Step 1 of this TEST BLOCK. Quickly release the edge so that the test item falls freely. Then go to Sequence #4 of this Step below. |
| | | **IF No…** | Go to Sequence #4 of this Step below. |

**Continued on next page**

# TEST SEQUENCE FOR PROJECT 6-SAMSCLUB

Continued from previous page

TEST BLOCK 3 Shock: Rotational FLAT Drop (continued)

| SHOCK: ROTATIONAL FLAT DROP (continued) | | | |
|---|---|---|---|
| **Step** | **Action** | | |
| 4 (cont.) | **Sequence #** | **Action** | |
| | 4 | Place the packaged-product on a flat, rigid surface such as steel or concrete with face 2 down. | |
| | 5 | Is it possible to lift edge 2-5 to the drop height prescribed in Step 1 of this TEST BLOCK without the test item toppling over (see the *Before You Begin Shock Testing* section)? | |
| | | **IF Yes…** | Lift edge 2-5 to the drop height prescribed in Step 1 of this TEST BLOCK. Quickly release the edge so that the test item falls freely. Then go to Sequence #6 of this Step below. |
| | | **IF No…** | Go to Sequence #6 of this Step below. |
| | 6 | Is it possible to lift edge 2-1 to the drop height prescribed in Step 1 of this TEST BLOCK without the test item toppling over (see the *Before You Begin Shock Testing* section)? | |
| | | **IF Yes…** | Lift edge 2-1 to the drop height prescribed in Step 1 of this TEST BLOCK. Quickly release the edge so that the test item falls freely. Then go to Sequence #7 of this Step below. |
| | | **IF No…** | Go to Sequence #7 of this Step below. |
| | 7 | Place the packaged-product on a flat, rigid surface such as steel or concrete with face 6 down. | |
| | 8 | Is it possible to lift edge 6-4 to the drop height prescribed in Step 1 of this TEST BLOCK without the test item toppling over (see the *Before You Begin Shock Testing* section)? | |
| | | **IF Yes…** | Lift edge 6-4 to the drop height prescribed in Step 1 of this TEST BLOCK. Quickly release the edge so that the test item falls freely. Then go to Sequence #9 of this Step below. |
| | | **IF No…** | Go to Sequence #9 of this Step below. |
| | 9 | Is it possible to lift edge 6-1 to the drop height prescribed in Step 1 of this TEST BLOCK without the test item toppling over (see the *Before You Begin Shock Testing* section)? | |
| | | **IF Yes…** | Lift edge 6-1 to the drop height prescribed in Step 1 of this TEST BLOCK. Quickly release the edge so that the test item falls freely. Then go to Step 6 of this TEST BLOCK. |
| | | **IF No…** | Go to Step 6 of this TEST BLOCK. |
| 5 | 1 | Place the packaged-product on a flat, rigid surface such as steel or concrete in an orientation as indicated by the approved container loading diagram. | |
| | 2 | Of the edges in contact with the floor surface, is it possible to lift one of the shorter edges to the drop height prescribed in Step 1 of this TEST BLOCK without the test item toppling over (see the *Before You Begin Shock Testing* section)? | |
| | | **IF Yes…** | Lift that edge to the drop height prescribed in Step 1 of this TEST BLOCK. Quickly release the edge so that the test item falls freely. Then go to Sequence #3 of this Step below. |
| | | **IF No…** | Go to Sequence #3 of this Step below. |
| | 3 | Of the edges in contact with the floor surface, is it possible to lift one of the longer edges to the drop height prescribed in Step 1 of this TEST BLOCK without the test item toppling over (see the *Before You Begin Shock Testing* section)? | |
| | | **IF Yes…** | Lift that edge to the drop height prescribed in Step 1 of this TEST BLOCK. Quickly release the edge so that the test item falls freely. Then go to Sequence #4 of this Step below. |
| | | **IF No…** | Go to Sequence #4 of this Step below. |

Continued on next page

# TEST SEQUENCE FOR PROJECT 6-SAMSCLUB

Continued from previous page

TEST BLOCK 3 Shock: Rotational FLAT Drop (continued)

| SHOCK: ROTATIONAL FLAT DROP (continued) | | |
|---|---|---|
| **Step** | **Action** | |
| 5 (cont.) | **Sequence #** | **Action** |
| | 4 | Repeat Sequence #1 through #3 of this Step above for all shipping orientations indicated by the approved container loading diagram. When all shipping orientations have been tested, go to Step 6 of this TEST BLOCK. |
| 6 | This Shock: Rotational FLAT Drop TEST BLOCK is now complete. Go to TEST BLOCK 4, Compression: Vertical (Top-to-Bottom). | |

TEST BLOCK 4 Compression: Vertical (Top-to-Bottom)

| COMPRESSION: VERTICAL (TOP-TO-BOTTOM) | | |
|---|---|---|
| This TEST BLOCK applies to all four packaged-product types covered by this procedure: **Types A**, **B**, **C**, and **D**. | | |
| **Step** | **Action** | |
| 1 | **IF the packaged-product type is...** | **THEN go to…** |
| | • **Type A, Non-Perishable**, Initially Shipped on a Pallet **or**<br>• **Type B** or **C, Non-Perishable**, *unitized*, being tested as **Type A** (see Notes on pages 5-7) **or**<br>• **Type B, Non-Perishable, Defined as *Large***, Initially Shipped Floor-Loaded, with a configuration which necessitates only a single particular shipping orientation **or**<br>• **Type D, Perishable**, Initially Shipped Palletized | Step 2 of this TEST BLOCK. |
| | • **Type B** or **Type C**, **Non-Perishable**, Initially Shipped Floor-Loaded, with a configuration which allows multiple shipping orientations | Step 3 of this TEST BLOCK. |
| 2 | **Sequence #** | **Action** |
| | 1 | Position the packaged-product for compression testing as follows:<br>• If testing is to be performed with a compression test machine, center the packaged-product on the lower platen of the machine with face 3 down.<br>• If testing is to be performed with weight(s) and a load spreader, place the packaged-product with face 3 resting on a smooth, flat, rigid surface. |
| | 2 | Place a pallet, as described in the *Equipment Required Compression* section, on top of the test item. Use a standard pallet as described, or if the test item is shipped on a custom pallet, use an identical custom pallet on top. Align the corners of the top pallet with the corners of the bottom pallet (center the top pallet on the test item).<br>***NOTE:*** For **Type B** packaged-products, if the upper surface dimensions in the test orientation are less than 45 x 37 in (1140 x 940 mm), no top pallet is required. |
| | 3 | **IF testing will be performed with…** / **THEN go to…** |
| | | A compression testing machine / Sequence #4 of this Step below. |
| | | Weight(s) and a load spreader / Sequence #8 of this Step below. |
| | 4 | Start the compression test machine and bring the platens together until the test item is contacted, then continue at the rate of 0.5 in (13 mm) per minute. |
| | 5 | Increase the compression force until it reaches the value determined in the *Before You Begin Vertical (Top-to-Bottom) Compression Testing* section, *Vertical Compression Test Force/-Weight Determination* table as follows:<br>• Step 4a, 4b, 4c or 4d as appropriate for **Type A, Non-Perishable** packaged-products.<br>• Step 2a for **Type B, Non-Perishable** packaged-products.<br>• Step 4e or 4f as appropriate for **Type D, Perishable** packaged-products. |
| | 6 | Maintain and release the force as follows:<br>• For **Type A and Type B, Non-Perishable** test items, maintain the force for 1 hour, then release.<br>• For **Type D**, **Perishable** test items, maintain the force for 30 seconds, then release. |
| | 7 | Go to Step 4 of this TEST BLOCK. |

Continued on next page

# TEST SEQUENCE FOR PROJECT 6-SAMSCLUB

**Continued from previous page**

**COMPRESSION: VERTICAL (TOP-TO-BOTTOM) (continued)**

| Step | Action | |
|---|---|---|
| 2 (cont.) | **Sequence #** | **Action** |
| | 8 | Smoothly and gently place the weight(s) and load spreader, as described in the *Equipment Required Compression* section, on top of the test specimen (and pallet as appropriate). The proper weight(s) + load spreader value is determined in the *Before You Begin Vertical (Top-to-Bottom) Compression Testing* section, *Vertical Compression Test Force/Weight Determination* table as follows:<br>• Step 5a, 5b, 5c, or 5d as appropriate for **Type A, Non-Perishable** packaged-products.<br>• Step 2b for **Type B, Non-Perishable** packaged-products.<br>• Step 5e or 5f as appropriate for **Type D, Perishable** packaged-products. |
| | 9 | Maintain and remove the weight(s) and load spreader as follows:<br>• For **Type A and Type B, Non-Perishable** test items, maintain for 1 hour, then remove.<br>• For **Type D**, **Perishable** test items, maintain for 30 seconds, then remove. |
| | 10 | Go to Step 4 of this TEST BLOCK |
| 3 | 1 | Determine compression testing orientations for the packaged-product as follows: |
| | | **IF…** / **THEN…** |
| | | There is *not* an applicable approved container loading diagram for the packaged-product / Perform separate compression tests with face 3 down, with face 2 down, and with face 6 down. |
| | | There *is* an applicable approved container loading diagram for the packaged-product / Perform separate compression tests in each orientation axis as indicated by the loading diagram. |
| | 2 | Position the packaged-product for compression testing in one of the orientations indicated in Sequence #1 of this Step above.<br>• If testing is to be performed with a compression test machine, center the packaged-product on the lower platen of the machine.<br>• If testing is to be performed with weight(s) and a load spreader, place the packaged-product on a smooth, flat, rigid surface. |
| | 3 | If the upper surface dimensions of the packaged-product in the test orientation are 45 x 37 in (1140 x 940 mm) or greater, place a pallet, as described in the *Equipment Required Compression* section, on top of the test specimen. Use a standard pallet as described, and center it on top of the test specimen. If the packaged-product's upper surface dimensions are *less* than 45 x 37 in (1140 x 940 mm) (by definition this includes all **Type C** packaged-products), then no top pallet is required. |
| | 4 | **IF testing will be performed with…** / **THEN go to…** |
| | | A compression testing machine / Sequence #5 of this Step below. |
| | | Weight(s) and a load spreader / Sequence #10 of this Step below. |
| | 5 | Start the compression test machine and bring the platens together until the test item is contacted, then continue at the rate of 0.5 in (13 mm) per minute. |
| | 6 | Increase the compression force until it reaches the value determined in the *Before You Begin Vertical (Top-to-Bottom) Compression Testing* section, *Vertical Compression Test Force/-Weight Determination* table, Step 2a. |
| | 7 | Maintain the force for one hour, then release. |

**Continued on next page**

# TEST SEQUENCE FOR PROJECT 6-SAMSCLUB

Continued from previous page

**TEST BLOCK 4 Compression: Vertical (Top-to-Bottom) (continued)**

| COMPRESSION: VERTICAL (TOP-TO-BOTTOM) (continued) | | |
|---|---|---|
| **Step** | **Action** | |
| 3 (cont.) | 8 | Repeat Sequence #2 through #11 of this Step as appropriate until all of the orientations required by Sequence #1 of this Step have been tested. |
| | 9 | Go to Step 4 of this TEST BLOCK. |
| | 10 | Smoothly and gently place the weight(s) and load spreader, as described in the *Equipment Required Compression* section, on top of the test specimen and pallet. The proper weight(s) + load spreader value is determined in the *Before You Begin Vertical (Top-to-Bottom) Compression Testing* section, *Vertical Compression Test Force/Weight Determination* table, Step 2b. |
| | 11 | After 1 hour, remove the weight(s) and load spreader. |
| | 12 | Repeat Sequence #2 through #11 of this Step until all of the orientations required by Sequence #1 of this Step have been tested. |
| | 13 | Go to Step 4 of this TEST BLOCK. |
| 4 | This Compression: Vertical (Top-to-Bottom) TEST BLOCK is now complete. Determine the next TEST BLOCK to be used as follows: | |
| | **IF the packaged-product type is…** | **THEN go to…** |
| | • **Type A, Non-Perishable**, Initially Shipped on Standard or Custom Pallet **or**<br>• **Type B** or **C, Non-Perishable**, *unitized*, being tested as **Type A** (see Notes on pages 5-7) **or**<br>• **Types B** or **C, Non-Perishable**, Initially Shipped Floor-Loaded | TEST BLOCK 8 (Vibration: Vertical Random). |
| | • **Type D, Perishable**, Initially Shipped Palletized | TEST BLOCK 5 (Shock: Free-Fall Drop, Bottom Orientations). |

**TEST BLOCK 5 Shock: Free-Fall Drop, Bottom Orientations**

**SHOCK: FREE-FALL DROP, BOTTOM ORIENTATIONS**

Complete this TEST BLOCK for the following types of packaged-products only, using the drop heights indicated:

- **Type A, Non-Perishable**, Initially Shipped on Standard or Custom Pallet, where the Club Quantity is *not* the unchanged palletized load
- **Type D, Perishable,** Initially Shipped Palletized

***NOTE:***
Three individual case/unit specimens are required for this test, selected from the pallet load. All specimens must pass all tests.

| Step | Action | |
|---|---|---|
| 1 | Select and use specimens from the palletized load as follows: | |
| | **IF the packaged-product is…** | **THEN…** |
| | **Type A, Non-Perishable**, Initially Shipped on Standard or Custom Pallet, where the Club Quantity is *not* the unchanged palletized load | Select three specimens from the palletized load. If possible, select one each from top, middle, and bottom layers. If applicable, use specimens selected from the load in TEST BLOCK 10 [Compression: Horizontal (Clamping Simulation)]. Document specimen locations on the Test Report. |
| | **Type D, Perishable,** Initially Shipped Palletized | Select three specimens from the INTERIOR of the load (if possible), and one each from top, middle, and bottom layers (if possible). Document specimen locations on the Test Report. |

Continued on next page

# TEST SEQUENCE FOR PROJECT 6-SAMSCLUB

**Continued from previous page**

**TEST BLOCK 5 Shock: Free-Fall Drop, Bottom Orientations (continued)**

| SHOCK: FREE-FALL DROP, BOTTOM ORIENTATIONS (continued) | | |
|---|---|---|
| **Step** | **Action** | |
| 2 | Determine the drop heights required for this test as follows: | |
| | **IF the packaged-product's initial point of origin is…** | **THEN the required drop height is…** |
| | Outside the U.S. (**International** Shipment) | 18 in (460 mm). |
| | Within the U.S. (**Domestic** Shipment) | 15 in (380 mm). |
| 3 | Perform free-fall drop tests from the specified height as follows and in the order listed: | |
| | First specimen | Drop on corner 2-3-5 |
| | | Drop on edge 3-6 |
| | | Drop flat on face 3 |
| | Second specimen | Drop on corner 3-4-6 |
| | | Drop on edge 3-5 |
| | | Drop flat on face 3 |
| | Third specimen | Drop on corner 3-4-5 |
| | | Drop on edge 2-3 |
| | | Drop flat on face 3 |
| 4 | This Shock: Free-Fall Drop, Bottom Orientations TEST BLOCK is now complete. Determine the next TEST BLOCK to be used as follows: | |
| | **IF the packaged-product is…** | **THEN…** |
| | **Type A, Non-Perishable**, Initially Shipped on Standard or Custom Pallet, where the Club Quantity is *not* the unchanged palletized load | Go to TEST BLOCK 12 (Vibration: Vertical, Stacked). |
| | **Type D, Perishable,** Initially Shipped Palletized | All testing is now complete. Go to the *Reporting an ISTA Test* section at the end of this Procedure. |

**TEST BLOCK 6 Shock: Free-Fall Drop, Multiple Orientations, First Sequence**

| SHOCK: FREE-FALL DROP, MULTIPLE ORIENTATIONS, FIRST SEQUENCE | | | | |
|---|---|---|---|---|
| Complete this TEST BLOCK for the following type of packaged-product only: **Type C, Non-Perishable, Defined as *Small,*** Initially Shipped Floor-Loaded, Club Quantity is Case or Unit**.** | | | | |
| **Step** | **Action** | | | |
| 1 | Perform 6 drop tests of the individual case or unit, in accordance with the table below and in the order listed. | | | |
| | **Drop Number** | **Drop Heights for International Shipment (initial origin outside the U.S.)** | **Drop Heights for Domestic Shipment (initial origin within the U.S.)** | **Orientation of Drop** |
| | 1 | 12 in (300 mm) | 10 in (250 mm) | Face 1 |
| | 2 | 12 in (300 mm) | 10 in (250 mm) | Face 2 |
| | 3 | 12 in (300 mm) | 10 in (250 mm) | Face 6 |
| | 4 | 12 in (300 mm) | 10 in (250 mm) | Corner 2-3-5 |
| | 5 | 12 in (300 mm) | 10 in (250 mm) | Edge 3-4 |
| | 6 | 18 in (460 mm) | 14 in (360 mm) | Face 3 |
| 2 | This Shock: Free-Fall Drop, Multiple Orientations, First Sequence TEST BLOCK is now complete. Go to TEST BLOCK 4 [Compression: Vertical (Top-to-Bottom)]. | | | |

# TEST SEQUENCE FOR PROJECT 6-SAMSCLUB

**TEST BLOCK 7 Shock: Free-Fall Drop, Multiple Orientations, Second Sequence**

## SHOCK: FREE-FALL DROP, MULTIPLE ORIENTATIONS, SECOND SEQUENCE

Complete this TEST BLOCK for the following type of packaged-product only: **Type C, Non-Perishable, Defined as *Small,*** Initially Shipped Floor-Loaded, Club Quantity is Case or Unit**.**

| Step | Action |
|---|---|
| 1 | Perform 6 drop tests of the individual case or unit, in accordance with the table below and in the order listed. |

| Drop Number | Drop Heights for International Shipment (initial origin outside the U.S.) | Drop Heights for Domestic Shipment (initial origin within the U.S.) | Orientation of Drop |
|---|---|---|---|
| 1 | 18 in (460 mm) | 14 in (360 mm) | Edge 2-3 |
| 2 | 18 in (460 mm) | 14 in (360 mm) | Corner 3-4-6 |
| 3 | 18 in (460 mm) | 14 in (360 mm) | Edge 4-5 |
| 4 | 18 in (460 mm) | 14 in (360 mm) | Corner 1-4-6 |
| 5 | 18 in (460 mm) | 14 in (360 mm) | Edge 1-6 |
| 6 | 32 in (810 mm) | 26 in (660 mm) | Face 3 |

| | | |
|---|---|---|
| 2 | This Shock: Free-Fall Drop, Multiple Orientations, Second Sequence TEST BLOCK is now complete. Determine the next TEST BLOCK or section to be used as follows: | |
| | **IF the packaged-products are…** | **THEN…** |
| | **Flat,** as defined in the "Definitions" section of the *Preface* | Go to TEST BLOCK 13 (Shock: Concentrated Edge Impact). |
| | **Elongated** as defined in the "Definitions" section of the *Preface* | Go to TEST BLOCK 14 (Shock: Bridged Impact). |
| | Neither **Flat** nor **Elongated** | All testing is now complete. Go to the *Reporting an ISTA Test* section at the end of this Procedure. |

**TEST BLOCK 8 Vibration: Vertical Random**

## VIBRATION, VERTICAL RANDOM

Complete this TEST BLOCK for the following types of packaged-products only: **Type A, Non-Perishable,** Initially Shipped on a Standard or Custom Pallet, or **Types B** and **C, Non-Perishable**, Initially Shipped Floor-Loaded (including *unitized* **Types B** and **C** being tested as **Type A**, see Notes on pages 5-7).

| Step | Action | |
|---|---|---|
| 1 | **IF the packaged-product type is...** | **THEN go to…** |
| | **Type A, Non-Perishable**, Initially Shipped on a Pallet **or** *unitized* **Types B** or **C** being tested as **Type A** (see Notes on pages 5-7) | Step 2 of this TEST BLOCK. |
| | **Type B** or **Type C**, **Non-Perishable**, Initially Shipped Floor-Loaded | Step 3 of this TEST BLOCK. |

| | Sequence # | Action |
|---|---|---|
| 2 | 1 | Place the entire palletized load in the center of the vibration table so that Face 3 rests on the platform. |
| | 2 | Use some means, as described in *Equipment Required Vibration*, to maintain proper alignment of the test item and to prevent it from moving off the vibration system's platform, without restricting vertical motion of the test item. |
| | 3 | Start the vibration machine to produce the "Spectrum for Palletized Loads and Individual Floor-Loaded Items" specified in the *Before You Begin Vertical Random Vibration Testing* section. |
| | 4 | Stop the vibration testing at the end of 3 hours (180 minutes). |
| | 5 | Go to Step 4 of this TEST BLOCK. |

**Continued on next page**

# TEST SEQUENCE FOR PROJECT 6-SAMSCLUB

**Continued from previous page**

| VIBRATION, VERTICAL RANDOM (continued) | | | |
|---|---|---|---|
| **Step** | **Action** | | |
| 3 | **Sequence #** | **Action** | |
| | 1 | Determine vibration testing orientations for the packaged-product as follows: | |
| | | **IF…** | **THEN…** |
| | | The packaged-product has a configuration which necessitates only a single particular shipping orientation | Perform a vibration test in the shipping orientation (face 3 down). |
| | | The packaged-product configuration allows multiple shipping orientations, and there is *not* an applicable approved container loading diagram | Perform separate vibration tests with face 1 down, with face 4 down, and with face 5 down. |
| | | There *is* an applicable approved container loading diagram for the packaged-product | Perform separate vibration tests in each orientation axis as indicated by the loading diagram. |
| | 2 | Place the packaged-product in the center of the vibration table in one of the orientations indicated in Sequence #1 of this Step above. | |
| | 3 | Place the appropriate Top Load Apparatus (**TL-H**, **TL-W**, or **TL-L**), as determined in the *Equipment Required Additional* and *Before You Begin Vertical Random Vibration Testing* sections, on top of the test specimen.<br>***Note:***<br>• If the calculated total theoretical top load for any axis is less than 25 lb (11 kg), do not use a Top Load Apparatus for that axis during vibration testing.<br>• For small and light packaged-products there is a reduced theoretical top load.<br>• For large packaged-products the top load is divided into separate apparatus. | |
| | 4 | Use some means, as described in *Equipment Required Vibration*, to maintain proper alignment of the Top Load Apparatus on the test item without restricting vertical motion of either the Apparatus or the test item. | |
| | 5 | Start the vibration machine to produce the "Spectrum for Palletized Loads and Individual Floor-Loaded Items" specified in the *Before You Begin Vibration Testing* section. | |
| | 6 | Stop the vibration testing at the end of 3 hours (180 minutes), and remove the Top Load Apparatus. | |
| | 7 | Repeat Sequence #2 through #6 of this Step as appropriate until all of the orientations required by Sequence #1 of this Step have been tested. | |
| | 8 | Go to Step 4 of this TEST BLOCK. | |
| 4 | This Vibration: Vertical Random TEST BLOCK is now complete. Determine the next TEST BLOCK to be used as follows: | | |
| | **IF the packaged-product type is…** | | **THEN go to…** |
| | **Type A, Non-Perishable**, Initially Shipped on a Pallet **or** *unitized* **Types B** or **C** being tested as **Type A** (see Notes on pages 5-7) | | TEST BLOCK 9 (Shock: Rotational EDGE Drop) |
| | **Type B** or **Type C, Perishable**, Initially Shipped Floor-Loaded | | TEST BLOCK 10 [Compression: Horizontal (Clamping Simulation)] |

***NOTE:*** For pails and cylinders, test with face 3 down and with **TL-H** applied only.

***NOTE:*** If the test item is an elongated packaged-product with a non-rectangular cross-section (round tube, triangular tube, etc.), do not use a Top Load Apparatus in the large-face-down orientations.

# TEST SEQUENCE FOR PROJECT 6-SAMSCLUB

## SHOCK: ROTATIONAL EDGE DROP

Complete this TEST BLOCK for the following types of packaged-products only, using the drop heights indicated:

- **Type A, Non-Perishable,** Initially Shipped on Standard or Custom Pallet. This is a test of the entire pallet load. **or**
- *Unitized* **Types B** or **C** being tested as **Type A** (see Notes on pages 5-7). This is a test of the entire pallet load. **or**
- **Type B, Non-Perishable, Defined as *Large***, Initially Shipped Floor-Loaded, Club Quantity is Case or Unit **or**
- **Type D, Perishable**, Initially Shipped Palletized. This is a test of the entire pallet load.

The test is performed on a flat, rigid surface such as steel or concrete. One edge is supported with a timber or equivalent support, the opposite edge is lifted and then released quickly so that it falls freely and strikes the surface.

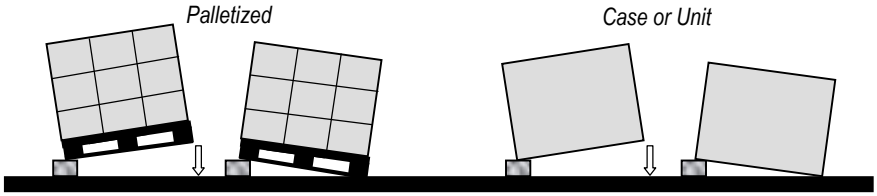


| Step | Action |
|---|---|
| 1 | Determine the drop heights required for this test as follows: |

| IF the packaged-product is… | THEN the required drop height is… | |
|---|---|---|
| | For **International** Shipment (initial origin outside the U.S.) | For **Domestic** Shipment (initial origin within the U.S.) |
| **Types A (Non-Perishable)** or **D (Perishable)**, Initially Shipped on a Pallet, **or** *unitized* **Types B** or **C** being tested as **Type A** (see Notes on pages 5-7) | 6 in (150 mm). | 4 in (100 mm). |
| **Type B, Non-Perishable, *Large***, Initially Shipped Floor-Loaded | 7 in (180 mm). | 5 in (130 mm). |

| Step | Action |
|---|---|
| 2 | Determine the next Step of this TEST BLOCK to be used as follows: |

| IF the packaged-product type is… | THEN go to… |
|---|---|
| • **Types A, Non-Perishable** or **Type D Perishable**, Initially Shipped on a Pallet **or**<br>• *Unitized* **Types B** or **C** being tested as **Type A** (see Notes on pages 5-7) **or**<br>• **Type B, Non-Perishable, *Large***, Initially Shipped Floor-Loaded, with a configuration which necessitates only a single particular shipping orientation | Step 3 of this TEST BLOCK. |
| • **Type B, Non-Perishable**, ***Large***, Initially Shipped Floor-Loaded, with a configuration which allows multiple shipping orientations, and there is *not* an applicable approved container loading diagram | Step 4 of this TEST BLOCK. |
| • **Type B, Non-Perishable**, ***Large***, Initially Shipped Floor-Loaded, and there *is* an applicable approved container loading diagram | Step 5 of this TEST BLOCK. |

3

| Sequence # | Action |
|---|---|
| 1 | Place the packaged-product on a flat, rigid surface such as steel or concrete with face 3 down. |
| 2 | Place edge 3-5 on a timber or equivalent support 3.5 to 4.0 in (90 to 100 mm) in height. |
| 3 | Lift edge 3-6 to the drop height prescribed in Step 1 of this TEST BLOCK. |
| 4 | Quickly release edge 3-6 so that it falls freely and strikes the surface. |
| 5 | Remove the timber or support from edge 3-5. |
| 6 | Place edge 3-4 on a timber or equivalent support 3.5 to 4.0 in (90 to 100 mm) in height. |
| 7 | Lift edge 2-3 to the drop height prescribed in Step 1 of this TEST BLOCK. |
| 8 | Quickly release edge 2-3 so that it falls freely and strikes the surface. |
| 9 | Remove the timber or support from edge 3-4. |
| 10 | Go to Step 6 of this TEST BLOCK. |

**Continued on next page**

# TEST SEQUENCE FOR PROJECT 6-SAMSCLUB

Continued from previous page

TEST BLOCK 9 Shock: Rotational EDGE Drop (continued)

| SHOCK: ROTATIONAL EDGE DROP (continued) | | | |
|---|---|---|---|
| **Step** | **Action** | | |
| 4 | **Sequence #** | **Action** | |
| | 1 | Place the packaged-product on a flat, rigid surface such as steel or concrete with face 1 down. | |
| | 2 | Is it possible to place edge 1-5 on a timber or equivalent support 3.5 to 4.0 in (90 to 100 mm) in height and lift edge 1-6 to the drop height prescribed in Step 1 of this TEST BLOCK without the test item toppling over (see the *Before You Begin Shock Testing* section)? | |
| | | **IF Yes…** | Place edge 1-5 on the timber or support, lift edge 1-6 to the drop height prescribed in Step 1 of this TEST BLOCK. Quickly release the edge so that the test item falls freely. Remove the timber or support, then go to Sequence #3 of this Step below. |
| | | **IF No…** | Go to Sequence #3 of this Step below. |
| | 3 | Is it possible to place edge 1-4 on a timber or equivalent support 3.5 to 4.0 in (90 to 100 mm) in height and lift edge 1-2 to the drop height prescribed in Step 1 of this TEST BLOCK without the test item toppling over (see the *Before You Begin Shock Testing* section)? | |
| | | **IF Yes…** | Place edge 1-4 on the timber or support, lift edge 1-2 to the drop height prescribed in Step 1 of this TEST BLOCK. Quickly release the edge so that the test item falls freely. Remove the timber or support, then go to Sequence #4 of this Step below. |
| | | **IF No…** | Go to Sequence #4 of this Step below. |
| | 4 | Place the packaged-product on a flat, rigid surface such as steel or concrete with face 4 down. | |
| | 5 | Is it possible to place edge 4-5 on a timber or equivalent support 3.5 to 4.0 in (90 to 100 mm) in height and lift edge 4-6 to the drop height prescribed in Step 1 of this TEST BLOCK without the test item toppling over (see the *Before You Begin Shock Testing* section)? | |
| | | **IF Yes…** | Place edge 4-5 on the timber or support, lift edge 4-6 to the drop height prescribed in Step 1 of this TEST BLOCK. Quickly release the edge so that the test item falls freely. Remove the timber or support, then go to Sequence #6 of this Step below. |
| | | **IF No…** | Go to Sequence #6 of this Step below. |
| | 6 | Is it possible to place edge 4-1 on a timber or equivalent support 3.5 to 4.0 in (90 to 100 mm) in height and lift edge 4-3 to the drop height prescribed in Step 1 of this TEST BLOCK without the test item toppling over (see the *Before You Begin Shock Testing* section)? | |
| | | **IF Yes…** | Place edge 4-1 on the timber or support, lift edge 4-3 to the drop height prescribed in Step 1 of this TEST BLOCK. Quickly release the edge so that the test item falls freely. Remove the timber or support, then go to Sequence #7 of this Step below. |
| | | **IF No…** | Go to Sequence #7 of this Step below. |
| | 7 | Place the packaged-product on a flat, rigid surface such as steel or concrete with face 5 down. | |
| | 8 | Is it possible to place edge 5-4 on a timber or equivalent support 3.5 to 4.0 in (90 to 100 mm) in height and lift edge 5-2 to the drop height prescribed in Step 1 of this TEST BLOCK without the test item toppling over (see the *Before You Begin Shock Testing* section)? | |
| | | **IF Yes…** | Place edge 5-4 on the timber or support, lift edge 5-2 to the drop height prescribed in Step 1 of this TEST BLOCK. Quickly release the edge so that the test item falls freely. Remove the timber or support, then go to Sequence #9 of this Step below. |
| | | **IF No…** | Go to Sequence #9 of this Step below. |

Continued on next page

# TEST SEQUENCE FOR PROJECT 6-SAMSCLUB

**Continued from previous page**

| SHOCK: ROTATIONAL EDGE DROP (continued) | | | |
|---|---|---|---|
| **Step** | **Action** | | |
| 4 (cont.) | **Sequence #** | **Action** | |
| | 9 | Is it possible to place edge 5-1 on a timber or equivalent support 3.5 to 4.0 in (90 to 100 mm) in height and lift edge 5-3 to the drop height prescribed in Step 1 of this TEST BLOCK without the test item toppling over (see the *Before You Begin Shock Testing* section)? | |
| | | **IF Yes…** | Place edge 5-1 on the timber or support, lift edge 5-3 to the drop height prescribed in Step 1 of this TEST BLOCK. Quickly release the edge so that the test item falls freely. Remove the timber or support, then go to Step 6 of this TEST BLOCK. |
| | | **IF No…** | Go to Step 6 of this TEST BLOCK. |
| 5 | 1 | Place the packaged-product on a flat, rigid surface such as steel or concrete in an orientation as indicated by the approved container loading diagram. | |
| | 2 | Of the edges in contact with the floor surface, is it possible to place one of the shorter edges on a timber or equivalent support 3.5 to 4.0 in (90 to 100 mm) in height and lift the opposite short edge to the drop height prescribed in Step 1 of this TEST BLOCK without the test item toppling over (see the *Before You Begin Shock Testing* section)? | |
| | | **IF Yes…** | Place the short edge which was lifted and dropped in this orientation in TEST BLOCK 3, Step 5, Sequence #2, on the timber or support, and lift the opposite short edge to the drop height prescribed in Step 1 of this TEST BLOCK. Quickly release the edge so that the test item falls freely. Remove the timber or support, then go to Sequence #3 of this Step below. |
| | | **IF No…** | Go to Sequence #3 of this Step below. |
| | 3 | Of the edges in contact with the floor surface, is it possible to place one of the longer edges on a timber or equivalent support 3.5 to 4.0 in (90 to 100 mm) in height and lift the opposite long edge to the drop height prescribed in Step 1 of this TEST BLOCK without the test item toppling over (see the *Before You Begin Shock Testing* section)? | |
| | | **IF Yes…** | Place the long edge which was lifted and dropped in this orientation in TEST BLOCK 3, Step 5, Sequence #3, on the timber or support, and lift the opposite long edge to the drop height prescribed in Step 1 of this TEST BLOCK. Quickly release the edge so that the test item falls freely. Remove the timber or support, then go to Sequence #4 of this Step below. |
| | | **IF No…** | Go to Sequence #4 of this Step below. |
| | 4 | Repeat Sequence #1 through #3 of this Step above for all remaining shipping orientations indicated by the approved container loading diagram. When all shipping orientations have been tested, go to Step 6 of this TEST BLOCK. | |
| 6 | This Shock: Rotational Edge Drop TEST BLOCK is now complete. Determine the next TEST BLOCK or section to be used as follows: | | |
| | **IF the packaged-product is…** | | **THEN…** |
| | **Type A, Non-Perishable**, Initially Shipped on an Industry-Standard block or stringer Pallet **and** where the Club Quantity is the unchanged palletized load **or**<br>**Types B** or **C**, *unitized*, being tested as **Type A** (see Notes on pages 5-7) | | All testing is now complete. Go to the *Reporting an ISTA Test* section at the end of this Procedure. |
| | **Type A, Non-Perishable**, Initially Shipped on an Industry-Standard block or stringer Pallet **and** where the Club Quantity is *not* the unchanged palletized load | | Go to TEST BLOCK 10 [Compression: Horizontal (Clamping Simulation)]. |
| | **Type A, Non-Perishable**, Initially Shipped on a *custom* pallet | | Go to TEST BLOCK 11 (Flat Push: Custom Pallet). |

**Continued on next page**

# TEST SEQUENCE FOR PROJECT 6-SAMSCLUB

**Continued from previous page**

TEST BLOCK 9 Shock: Rotational EDGE Drop (continued)

| SHOCK: ROTATIONAL EDGE DROP (continued) | | |
|---|---|---|
| **Step** | **Action** | |
| 6 (cont.) | **Type B, Non-Perishable, *Large***, Initially Shipped Floor-Loaded, **and** the packaged-product configuration is *not* Flat nor Elongated | All testing is now complete. Go to the *Reporting an ISTA Test* section at the end of this Procedure. |
| | **Type B, Non-Perishable, *Large***, Initially Shipped Floor-Loaded, **and** the packaged-product configuration is **Flat** as defined in the *Preface, Definitions* section | Go to TEST BLOCK 13 (Shock: Concentrated Edge Impact). |
| | **Type B, Non-Perishable, *Large***, Initially Shipped Floor-Loaded, **and** the packaged-product configuration is **Elongated** as defined in the *Preface, Definitions* section | Go to TEST BLOCK 14 (Shock: Bridged Impact). |
| | **Type D, Perishable**, Initially Shipped on a Pallet | Go to TEST BLOCK 4 [Compression: Vertical (Top-to-Bottom)]. |

TEST BLOCK 10 Compression: Horizontal (Clamping Simulation)

**COMPRESSION: HORIZONTAL (CLAMPING SIMULATION)**

Complete this TEST BLOCK for the following types of packaged-products and conditions only:

1. **Type A, Non-Perishable**, Initially Shipped on a Pallet, with the conditions described in Step 1 below. **IF** *none* of the described conditions are met, **go to** TEST BLOCK 5.
   *Three specimens are required for these tests, selected from the pallet load. All specimens must pass the tests*.
2. **Types B** or **C, Non-Perishable,** Initially Shipped Floor-Loaded, with the conditions described in Step 1 below.
   *One specimen is required for these tests*.

See the *Before You Begin Horizontal Compression Testing (Clamping Simulation)* section.
No Compression: Horizontal (Clamping Simulation) tests are required for Pails/Cylinders.

| Step | Action | |
|---|---|---|
| 1 | Determine the next Step of this TEST BLOCK to be used as follows: | |
| | **IF the packaged-product type is…** | **THEN go to…** |
| | • **Type A, Non-Perishable**, Initially Shipped on a Pallet **and** where the club (store) quantity is a complete layer from the load | Step 2 of this TEST BLOCK. |
| | • **Type A, Non-Perishable**, Initially Shipped on a Pallet **and** when packaged-products can arrive at a Distribution Center not on a pallet | Step 3 of this TEST BLOCK. |
| | • **Type B** or **C, Non-Perishable**, Initially Shipped Floor-Loaded **and**<br>○ The initial point of origin is outside the U.S. (International shipment) **and**<br>○ There is *not* an applicable approved container loading diagram **or**<br>○ There *is* an applicable approved container loading diagram and it shows *more than one* shipping orientation **or**<br>• **Type B** or **C, Non-Perishable**, Initially Shipped Floor-Loaded **and** when packaged-products can arrive at a Distribution Center not on a pallet **or**<br>• **Type B** or **C, Non-Perishable**, Initially Shipped Floor-Loaded **and** undefined combinations or situations apply | Step 4 of this TEST BLOCK. |
| | • **Type B** or **C, Non-Perishable**, Initially Shipped Floor-Loaded **and**<br>○ The initial point of origin is outside the U.S. (International shipment) **and**<br>○ There *is* an applicable approved container loading diagram and it shows *only one* shipping orientation **or**<br>○ The test item is *unitized* and initially shipped *without* a slipsheet, but is ultimately placed on a pallet for shipment *as a unit* to the club (store) (see Notes on pages 5-7) | Step 5 of this TEST BLOCK. |

**Continued on next page**

# TEST SEQUENCE FOR PROJECT 6-SAMSCLUB

Continued from previous page

TEST BLOCK 10 Compression: Horizontal (Clamping Simulation) (continued)

| COMPRESSION: HORIZONTAL (CLAMPING SIMULATION) (continued) | | | |
|---|---|---|---|
| **Step** | **Action** | | |
| 2 | **Sequence #** | **Action** | |
| | 1 | Select three specimens from the palletized load. If possible, select one each from top, middle, and bottom layers. Document specimen locations on the Test Report. | |
| | 2 | Place the **first** test specimen on a flat, level surface with face 3 down. | |
| | 3 | Determine the required compression (clamping) test force by first calculating values from the formulas in the "Clamp Testing Configuration and Forces" section of *Before You Begin Horizontal Compression Testing* (*Clamping Simulation*). Use the distance between faces 2 and 4 of the packaged-product as **D** in the formulas. | |
| | | **IF** the calculated value is 400 lbf (1800 N) or below | **THEN** use 400 lbf (1800 N) as the clamping test force. |
| | | **IF** the calculated value is 2000 lbf (8900 N) or above | **THEN** use 2000 lbf (8900 N) as the clamping test force. |
| | | **IF** the calculated value is between 400 lbf (1800 N) and 2000 lbf (8900 N) | **THEN** use the calculated value for the clamping test force. |
| | 4 | Position the clamp tester platens near faces 2 and 4, each platen <u>up</u> 3 in (76 mm) and <u>back</u> 3 in (76 mm) from the corners of the test item as shown in the figure at right. | 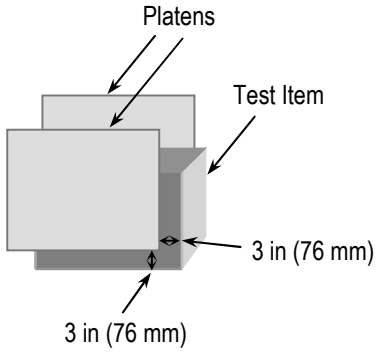 |
| | 5 | Start moving the clamp tester platens toward each other at a rate of 0.02 to 0.1 in/sec (0.5-2.5 mm/sec) to apply a horizontal compression force to faces 2 and 4 of the test item. | |
| | 6 | Increase the compression force until it reaches the value determined in Sequence #3 above. | |
| | 7 | Maintain the compression force for 30 seconds, then release. | |
| | 8 | Repeat Sequence #s 4-7 of this Step above until a total of 5 force applications to faces 2 and 4 of the first test specimen have been accomplished. | |
| | 9 | Place the **second** test specimen on a flat, level surface with face 3 down. | |
| | 10 | Perform Sequence #s 4-7 of this Step above, but applying the clamping force to packaged-product faces 5 and 6. Use the same clamping force as determined in Sequence #3 above. | |
| | 11 | Repeat Sequence #10 above until a total of 5 force applications to faces 5 and 6 of the second test specimen have been accomplished. | |
| | 12 | Place the **third** test specimen on a flat, level surface with face 3 down. | |
| | 13 | Perform Sequence #s 4-7 of this Step above, again applying the clamping force to packaged-product faces 2 and 4. Use the same clamping force as determined in Sequence #3 above. | |
| | 14 | Repeat Sequence #13 above until a total of 5 force applications to faces 2 and 4 of the third test specimen have been accomplished. | |
| | 15 | Go to Step 6 of this TEST BLOCK. | |

Continued on next page

# TEST SEQUENCE FOR PROJECT 6-SAMSCLUB

Continued from previous page

TEST BLOCK 10 Compression: Horizontal (Clamping Simulation) (continued)

| COMPRESSION: HORIZONTAL (CLAMPING SIMULATION) (continued) | | |
|---|---|---|
| **Step** | **Action** | |
| 3 | **Sequence #** | **Action** |
| | 1 | Select three specimens from the palletized load. If possible, select one each from top, middle, and bottom layers. Document specimen locations on the Test Report. |
| | 2 | Place the **first** test specimen on a flat, level surface with face 3 down. |
| | 3 | Determine the required compression (clamping) test force as described in Sequence #3 of Step 2 of this TEST BLOCK, but use the smallest of the packaged-product's height, width, and depth dimensions as **D** in the formulas. |
| | 4 | Perform Sequence #s 4-7 of Step 2 of this TEST BLOCK, applying the clamping force determined in Sequence #3 of this Step above to packaged-product faces 2 and 4. |
| | 5 | Repeat Sequence #4 of this Step until a total of 5 force applications to faces 2 and 4 of the first test specimen have been accomplished. |
| | 6 | Place the **second** test specimen on a flat, level surface with face 3 down. |
| | 7 | Perform Sequence #s 4-7 of Step 2 of this TEST BLOCK, but applying the clamping force determined in Sequence #3 of this Step above to packaged-product faces 5 and 6. |
| | 8 | Repeat Sequence #7 of this Step above until a total of 5 force applications to faces 5 and 6 of the second test specimen have been accomplished. |
| | 9 | Place the **third** test specimen on a flat, level surface with face 2 down. |
| | 10 | Perform Sequence #s 4-7 of Step 2 of this TEST BLOCK, but applying the clamping force determined in Sequence #3 of this Step above to packaged-product faces 1 and 3. |
| | 11 | Repeat Sequence #10 of this Step until a total of 5 force applications to faces 1 and 3 of the second test specimen have been accomplished. |
| | 12 | Go to Step 6 of this TEST BLOCK. |
| 4 | 1 | Place the test specimen on a flat, level surface with face 3 down. |
| | 2 | Determine the required compression (clamping) test force as described in Sequence #3 of Step 2 of this TEST BLOCK, but use the smallest of the packaged-product's height, width, and depth dimensions as **D** in the formulas. |
| | 3 | Perform Sequence #s 4-7 of Step 2 of this TEST BLOCK, applying the clamping force determined in Sequence #2 of this Step above to packaged-product faces 2 and 4. |
| | 4 | Repeat Sequence #3 of this Step until a total of 5 force applications to faces 2 and 4 of the test specimen have been accomplished. |
| | 5 | Perform Sequence #s 4-7 of Step 2 of this TEST BLOCK, but now applying the clamping force determined in Sequence #2 of this Step above to packaged-product faces 5 and 6. |
| | 6 | Repeat Sequence #5 of this Step until a total of 5 force applications to faces 5 and 6 of the test specimen have been accomplished. |
| | 7 | Place the test specimen on a flat, level surface with face 2 down. |
| | 8 | Perform Sequence #s 4-7 of Step 2 of this TEST BLOCK, but applying the clamping force determined in Sequence #2 of this Step above to packaged-product faces 1 and 3. |
| | 9 | Repeat Sequence #8 of this Step until a total of 5 force applications to faces 1 and 3 of the test specimen have been accomplished. |
| | 10 | Go to Step 6 of this TEST BLOCK. |

Continued on next page

# TEST SEQUENCE FOR PROJECT 6-SAMSCLUB

Continued from previous page

**TEST BLOCK 10 Compression: Horizontal (Clamping Simulation) (continued)**

| COMPRESSION: HORIZONTAL (CLAMPING SIMULATION) (continued) | | |
|---|---|---|
| **Step** | **Action** | |
| 5 | **Sequence #** | **Action** |
| | 1 | Place the packaged-product or unitized load on a flat, level surface in the orientation indicated by the approved container loading diagram (or, for a unitized load, in the shipping orientation). |
| | 2 | Determine the required compression (clamping) test force as described in Sequence #3 of Step 2 of this TEST BLOCK, but use the smallest of the two packaged-product's or unitized load's horizontal dimensions (in this orientation) as **D** in the formulas. |
| | 3 | Perform Sequence #s 4-7 of Step 2 of this TEST BLOCK, applying the clamping force determined in Sequence #2 of this Step above to two opposite vertical faces of the packaged-product. |
| | 4 | Repeat Sequence # 3 of this Step above until a total of 5 force applications to the two opposite vertical faces have been accomplished. |
| | 5 | Perform Sequence #s 4-7 of Step 2 of this TEST BLOCK, but now applying the clamping force determined in Sequence #2 of this Step above to the two opposite packaged-product vertical faces not tested in Sequence #3 of this Step above. |
| | 6 | Repeat Sequence #5 of this Step above until a total of 5 force applications to the two opposite vertical faces have been accomplished. |
| | 7 | Go to Step 6 of this TEST BLOCK. |
| 6 | This Compression: Horizontal (Clamping Simulation) TEST BLOCK is now complete. Determine the next TEST BLOCK to be used as follows: | |
| | **IF the packaged-product is…** | **THEN…** |
| | **Type A, Non-Perishable**, Initially Shipped on Standard or Custom Pallet, where the Club Quantity is *not* the unchanged pallet load | Go to TEST BLOCK 5 (Shock: Free-Fall Drop, Bottom Orientations). |
| | **Type B, Non-Perishable, Defined as *Large***, Initially Shipped Floor Loaded | Go to TEST BLOCK 9 (Shock: Rotational EDGE Drop). |
| | **Type C, Non-Perishable, Defined as *Small***, Initially Shipped Floor Loaded | Go to TEST BLOCK 7 (Shock: Free-Fall Drop, Multiple Orientations, Second Sequence). |
| | **Type B** or **C, Non-Perishable**, *unitized*, initially shipped floor-loaded *without* a slipsheet, but ultimately placed on a pallet for shipment *as a unit* to the club (store) (see Notes on pages 5-7) | Go to TEST BLOCK 2 (Shock: Inclined or Horizontal Impact). Place the unitized load on a standard pallet before performing the tests. Properly secure it to the pallet with several layers of stretch wrap, with strapping, or with other appropriate means. |

**TEST BLOCK 11 Flat Push: Custom Pallet**

| FLAT PUSH: CUSTOM PALLET | | |
|---|---|---|
| Complete this TEST BLOCK for the following type of packaged-product only: **Type A, Non-Perishable**, Initially Shipped on a **Custom** Pallet (not an *industry-standard* block or stringer pallet). | | |
| **Step** | **Action** | |
| 1 | Place the palletized load so that face 3 rests on a flat and level floor. | |
| 2 | Using a Fork Lift Truck as described in the *Equipment Required Flat Push* section, align a single lift blade tip with the middle pallet stringer or block on side (Face) 5. | 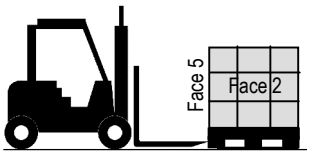  |
| 3 | Starting with the blade tip touching the stringer or block nominally half way up its vertical height, push the palletized load straight forward a minimum of 40 in (1 m). Push the required distance in approximately 2 to 3 seconds. | |
| 4 | Repeat Steps 2 and 3 above, but push the palletized load on side (Face) 2. | |

Continued on next page

# TEST SEQUENCE FOR PROJECT 6-SAMSCLUB

**Continued from previous page**

**TEST BLOCK 11 Flat Push: Custom Pallet (cont.)**

| FLAT PUSH: CUSTOM PALLET (continued) | | |
|---|---|---|
| **Step** | **Action** | |
| 5 | This Flat Push: Custom Pallets TEST BLOCK is now complete. Determine the next TEST BLOCK or section to be used as follows: | |
| | **IF the packaged-product is…** | **THEN…** |
| | **Type A, Non-Perishable**, Initially Shipped on [Standard or] Custom Pallet, and the club (store) quantity is the unchanged palletized load | All testing is now complete. Go to the *Reporting an ISTA Test* section at the end of this Procedure. |
| | **Type A, Non-Perishable**, Initially Shipped on [Standard or] Custom Pallet, and the club (store) quantity is *not* the unchanged palletized load | Go to TEST BLOCK 10 [Compression: Horizontal (Clamping Simulation)]. |

**TEST BLOCK 12 Vibration: Vertical, Stacked**

| VIBRATION: VERTICAL, STACKED | | |
|---|---|---|
| Complete this TEST BLOCK for the following type of packaged-products only: **Type A, Non-Perishable**, Initially Shipped on a Pallet, when shipment to the club (store) is *not* the unchanged palletized load and consists of mixed cases on a pallet [typical for many health and beauty aids (HBA), many over-the-counter pharmaceuticals (OTC), and many office supplies, etc.]. Three packages are tested in a stack. | | |
| **Step** | **Action** | |
| 1 | Use the three test specimens previously used in TEST BLOCK 5 (Shock: Free-Fall Drop, Bottom Orientations). | |
| 2 | Determine the Stack Configuration as directed in the "Stacking Packaged-Products for Vibration Testing" section of *Before You Begin Vertical Random Vibration Testing*. | |
| 3 | Place the stacked packaged-products in the center of the vibration table. | |
| 4 | Use some means, as described in *Equipment Required Vibration*, to maintain proper alignment of the stack and to prevent it from moving off the vibration system's platform, without restricting vertical motion of any package in the stack. | |
| 5 | Start the vibration machine to produce the "Spectrum for Stacked Packages" specified in the *Before You Begin Vibration Testing* section. | |
| 6 | Stop the vibration testing at the end of 1 hour (60 minutes). | |
| 7 | This Vibration: Vertical, Stacked TEST BLOCK is now complete. Determine the next TEST BLOCK or section to be used as follows: | |
| | **IF the packaged-products in the stack are…** | **THEN…** |
| | **Flat,** as defined in the "Definitions" section of the *Preface* | Go to TEST BLOCK 13 (Shock: Concentrated Edge Impact). |
| | **Elongated** as defined in the "Definitions" section of the *Preface* | Go to TEST BLOCK 14 (Shock: Bridged Impact). |
| | Neither **Flat** nor **Elongated** | All testing is now complete. Go to the *Reporting an ISTA Test* section at the end of this Procedure. |

# TEST SEQUENCE FOR PROJECT 6-SAMSCLUB

## SHOCK: CONCENTRATED EDGE IMPACT

Complete this TEST BLOCK for packaged-products considered **Flat** as defined in the "Definitions" section of the *Preface*. See *Equipment Required Shock* for information about this test.

| STEP | ACTION | |
|---|---|---|
| 1 | Determine the next Step of this TEST BLOCK to be used as follows: | |
| | **IF the packaged-product type is…** | **THEN go to…** |
| | **Type A, Non-Perishable**, Initially Shipped on a Pallet, where the club (store) quantity is <u>*not*</u> the unchanged palletized load **and** is considered **Flat** as defined in the "Definitions" section of the *Preface* | Step 3 of this TEST BLOCK to test the three specimens previously selected and used. All specimens must pass the tests. |
| | **Types B** or **C, Non-Perishable**, Initially Shipped Floor-Loaded **and** is considered **Flat** as defined in the "Definitions" section of the *Preface* | Step 2 of this TEST BLOCK. |

| | Sequence # | Action |
|---|---|---|
| 2 | 1 | Place the packaged-product so that Face 3 rests on a rigid surface such as steel or concrete. |
| | 2 | Position the Hazard Box above the packaged-product in an edge-drop orientation with the reinforced edge down, parallel to the packaged-product's Face 1 surface and parallel with its width dimension. Carefully align the Hazard Box so that the geometrical center of the packaged-product's Face 1 is directly under the midpoint of the Hazard Box's reinforced edge. |
| | 3 | Drop the Hazard Box onto the packaged-product from a distance of :<br>• 15 in (380 mm) for **International** Shipment **or**<br>• 12 in (300 mm) for **Domestic** Shipment<br>as measured from Face 1 of the packaged-product.<br><br>See the accompanying illustration.<br> 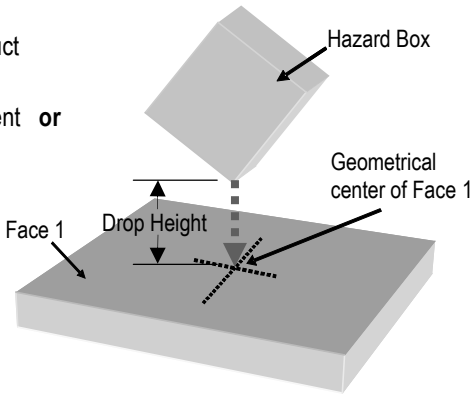 <br> |
| | 4 | Go to Step 4 of this TEST BLOCK. |
| 3 | 1 | Place the first packaged-product so that Face 3 rests on a rigid surface such as steel or concrete. |
| | 2 | Perform Sequence #s 2 and 3 of Step 2 above for the first packaged-product. |
| | 3 | Place the second packaged-product so that Face 3 rests on a rigid surface such as steel or concrete. |
| | 4 | Perform Sequence #s 2 and 3 of Step 2 above for the second packaged-product. |
| | 5 | Place the third packaged-product so that Face 3 rests on a rigid surface such as steel or concrete. |
| | 6 | Perform Sequence #s 2 and 3 of Step 2 above for the third packaged-product. |
| | 7 | Go to Step 4 of this TEST BLOCK. |
| 4 | This Shock: Concentrated Edge Impact TEST BLOCK is now complete. All testing is now complete. Go to the *Reporting an ISTA Test* section at the end of this Procedure. | |

***NOTE:*** If a packaged-product can be defined as both **Elongated** and **Flat** in accordance with "Definitions" in the *Preface*, it should be tested as **Elongated**.

# TEST SEQUENCE FOR PROJECT 6-SAMSCLUB

## SHOCK: BRIDGED IMPACT

Complete this TEST BLOCK for packaged-products considered **Elongated** as defined in the "Definitions" section of the *Preface*. See *Equipment Required Shock* for information about this test.

| STEP | ACTION | |
|---|---|---|
| 1 | Determine the next Step of this TEST BLOCK to be used as follows: | |
| | **IF the packaged-product type is…** | **THEN go to…** |
| | **Type A, Non-Perishable**, Initially Shipped on a Pallet, where the club (store) quantity is *not* the unchanged palletized load **and** is considered **Elongated** as defined in the "Definitions" section of the *Preface* | Step 3 of this TEST BLOCK to test the three specimens previously selected and used. All specimens must pass the tests. |
| | **Types B** or **C, Non-Perishable**, Initially Shipped Floor-Loaded **and** is considered **Elongated** as defined in the *Preface* "Definitions" section | Step 2 of this TEST BLOCK |

| STEP | Sequence # | Action |
|---|---|---|
| 2 | 1 | Place the packaged-product so that Face 3 (or Line 2-6 for Pails/Cylinders) rests on two separate support blocks, which are on opposite ends of the longest test item dimension, parallel to each other, and parallel to the shortest test item edges. |
| | 2 | Position the Hazard Box above the packaged-product in an edge-drop orientation with the reinforced edge down and perpendicular to the packaged-product's longest dimension. Carefully align the Hazard Box so that the midpoint of the packaged-product Face 1 (or Line 4-5 for Pails/Cylinders) is directly under the midpoint of the Hazard Box's reinforced edge. |
| | 3 | Drop the Hazard Box onto the packaged-product from a distance of<br>• 15 in (380 mm) for **International** Shipment **or**<br>• 12 in (300 mm) for **Domestic** Shipment<br>as measured from the packaged-product's top Face or Line.<br> 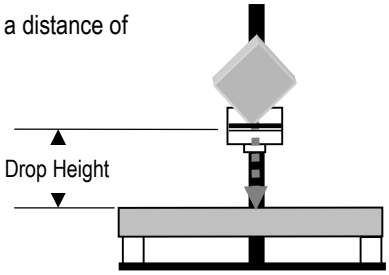 <br><br>See the accompanying illustration. |
| | 4 | Go to Step 4 of this TEST BLOCK. |
| 3 | 1 | Place the first packaged-product so that Face 3 (or Line 2-6 for Pails/Cylinders) rests on two separate support blocks, which are on opposite ends of the longest test item dimension, parallel to each other, and parallel to the shortest test item edges. |
| | 2 | Perform Sequence #s 2 and 3 of Step 2 in this TEST BLOCK for the first packaged-product. |
| | 3 | Place the second packaged-product so that Face 3 (or Line 2-6 for Pails/Cylinders) rests on two separate support blocks, which are on opposite ends of the longest test item dimension, parallel to each other, and parallel to the shortest test item edges. |
| | 4 | Perform Sequence #s 2 and 3 of Step 2 in this TEST BLOCK for the second packaged-product. |
| | 5 | Place the third packaged-product so that Face 3 (or Line 2-6 for Pails/Cylinders) rests on two separate support blocks, which are on opposite ends of the longest test item dimension, parallel to each other, and parallel to the shortest test item edges. |
| | 6 | Perform Sequence #s 2 and 3 of Step 2 in this TEST BLOCK for the third packaged-product. |
| | 7 | Go to Step 4 of this TEST BLOCK. |
| 4 | This Shock: Bridged Impact TEST BLOCK is now complete. All testing is now complete. Go to the *Reporting an ISTA Test* section at the end of this Procedure. | |

***NOTE:*** If a packaged-product can be defined as both **Elongated** and **Flat** in accordance with "Definitions" in the *Preface*, it should be tested as **Elongated**.

# REPORTING AN ISTA TEST

ISTA Test Report Forms may be downloaded by members through the online ISTA Member Center (**www.ista.org/members/**). Custom forms are also acceptable, but information on an official ISTA Report Form is considered to be the minimum required for any test report submission and consideration. Test report forms should be submitted to ISTA Headquarters by mail, fax or electronically. Test reports should be detailed enough for accurate repeatability of the test.

The packaged-product has satisfactorily passed the test if, upon examination, it meets the Product Damage Tolerance and Package Degradation Allowance determined prior to testing.

ISTA Certified Testing Laboratories:

- Should file a test report on all ISTA Test Procedures or Projects conducted.
- Shall file a test report on all ISTA Test Procedures or Projects conducted to obtain Transit Tested Package Certification or Acknowledgement.

To submit a test report form:

- Email to ista@ista.org
- Mail to address shown below
- Fax to +1 517-333-3813.

**ISTA Transit Tested Program: Packaged-Product Certification**


The ISTA Transit Tested Certification Mark as shown:

- is a registered certification mark **and**
- can only be printed on certified packages **and**
- can only be used by license agreement **and**
- by a Shipper member of the International Safe Transit Association.

When a Shipper member prints this certification mark on a packaged-product, with their manufacturer's license number, they are showing their customer, vendors and carriers that it has passed the requirements of ISTA preshipment testing.

To obtain initial certification of a packaged-product:

- the product manufacturer must be a Shipper member of ISTA in good-standing and with a valid License Agreement on file
- the testing laboratory must be a member of ISTA in good-standing and have a valid lab certification date
- a test report must be submitted by the laboratory to ISTA Headquarters.

In order to maintain its certified status and eligibility for identification with the Transit Tested Certification Mark, each packaged-product must be re-tested whenever a change is made in the:

- Product or
- Process or
- Package.

If corrugated packaging is used, it is recommended that the basis weights of the constituent papers/paperboards be determined after testing and documented to provide the best indicator of equivalence or change.

As a quality control procedure, packaged-products should be re-tested frequently, for example, yearly.

**For additional information, refer to *Guidelines for Selecting and Using ISTA Test Procedures and Projects.***

ISTA Membership information is available at **www.ista.org**.

*This Test Project is published by:*
*International Safe Transit Association*
*1400 Abbot Road, Suite 160, East Lansing, Michigan 48823-1900 USA*



Order Information: Additional copies of this Test Project and the ISTA® RESOURCE BOOK may be ordered online at www.ista.org or by contacting ISTA at (+1) 517.333.3437. A listing of current procedure version dates is available at www.ista.org.